HAL
open science

Control theory and dynamical systems

Ayadi Lazrag

To cite this version:

Ayadi Lazrag. Control theory and dynamical systems. General Mathematics [math.GM]. Université Nice Sophia Antipolis, 2014. English. NNT : 2014NICE4060 . tel-01080164

HAL Id: tel-01080164

https://theses.hal.science/tel-01080164v1

Submitted on 4 Nov 2014

HAL is a multi-disciplinary open access archive for the deposit and dissemination of scientific research documents, whether they are published or not. The documents may come from teaching and research institutions in France or abroad, or from public or private research centers.

L'archive ouverte pluridisciplinaire **HAL**, est destinée au dépôt et à la diffusion de documents scientifiques de niveau recherche, publiés ou non, émanant des établissements d'enseignement et de recherche français ou étrangers, des laboratoires publics ou privés.

UNIVERSITÉ DE NICE-SOPHIA ANTIPOLIS – UFR Sciences
École Doctorale de Sciences Fondamentales et Appliquées

THÈSE

pour obtenir le titre de

Docteur en Sciences

Discipline : Mathématiques

présentée et soutenue par

Ayadi LAZRAG

Théorie de contrôle et systèmes dynamiques

Thèse dirigée par **Ludovic RIFFORD**

soutenue le 25 septembre 2014

devant le jury composé de

M. Jean-Baptiste CAILLAU	Examinateur
M. Yacine CHITOUR	Rapporteur
M. Jean-Baptiste POMET	Examinateur
M. Witold RESPONDEK	Examinateur
M. Ludovic RIFFORD	Directeur de thèse
M. Emmanuel TRELAT	Examinateur

Rapporteur externe (absent à la soutenance)

M. Anthony BLOCH

Laboratoire Jean Alexandre Dieudonné, Parc Valrose, 06108 Nice Cedex 2

Résumé

Cette thèse est divisée en trois parties. Dans la première partie, nous commençons par décrire des résultats très connus en théorie du contrôle géométrique tels que le théorème de Chow-Rashevsky, la condition de rang de Kalman, l'application Entrée-Sortie et le test linéaire. De plus, nous définissons et nous étudions brièvement la contrôlabilité locale au voisinage d'un contrôle de référence au premier et au second ordre. Dans la deuxième partie, nous donnons une preuve élémentaire du lemme de Franks linéaire pour les flots géodésiques qui utilise des techniques basiques de théorie du contrôle géométrique. Dans la dernière partie, étant donnée une variété Riemanienne compacte, nous prouvons un lemme de Franks uniforme au second ordre pour les flots géodésiques et on applique le résultat à la théorie de la persistance. Dans cette partie, nous introduisons avec plus de détails les notions de contrôlabilité locale au premier et au second ordre. En effet, nous donnons un résultat de contrôlabilité au second ordre dont la preuve est longue et technique.

Abstract

This thesis is devided into three parts. In the first part we begin by describing some well known results in geometric control theory such as the Chow-Rashevsky Theorem, the Kalman rank condition, the End-Point Mapping and the linear test. Moreover, we define and study briefly local controllability around a reference control at first and second order. In the second part we provide an elementary proof of the Franks lemma for geodesic flows using basic tools of geometric control theory. In the last part, given a compact Riemannian manifold, we prove a uniform Franks' lemma at second order for geodesic flows and apply the result in persistence theory. In this part we introduce with more details notions of local controllability at first and second order. In fact, we provide a second order controllability result whose proof is long and technical.

Remerciements

Au terme de cette thèse, j'aimerais en tout premier lieu adresser mes plus chaleureux remerciements à mon directeur de thèse Ludovic Rifford. Je lui suis également reconnaissant pour sa disponibilité, ses qualités pédagogiques et scientifiques. J'ai beaucoup appris à ces côtés et je lui adresse toute ma gratitude.

Je remercie les rapporteurs de cette thèse Anthony Bloch et Yacine Chitour pour l'intérêt qu'ils ont porté à mon travail.

Je suis très heureux de compter parmi les membres de mon jury Jean-Baptiste Caillau, Jean-Baptiste Pomet, Witold Respondek et Emmanuel Trélat.

Le monitorat constitue une partie importante de ce travail et cette tâche n'aurait pas été si agréable sans tous ceux avec lesquels j'ai collaboré.

Je remercie tous les membres de LJAD.

Je souhaite remercier mes parents, mes frères et mes soeurs pour leur soutien constant.

Contents

Résumé **1**

Abstract **2**

Remerciements **3**

1 Introduction **6**

2 Geometric control methods in finite dimension **17**

2.1 Introduction 17

2.2 A global controllability result : the Rashevsky-Chow Theorem 18

2.3 Controllability of linear control systems 20

2.4 Local controllability at an equilibrium point 24

2.5 Local controllability around a reference control 28

2.5.1 The End-Point Mapping 28

2.5.2 First-order controllability results 28

2.5.3 Some sufficient condition for local openness 31

2.5.4 Second-order controllability results 42

3 A geometric control proof of Franks' lemma for Geodesic Flows **45**

3.1 Introduction 45

3.2 Preliminaries in geometric control theory 47
3.2.1 The End-Point mapping 47
3.2.2 First order controllability results 49
3.3 Proof of Theorem 1.1 52
3.4 Proof of Proposition 1.2 56

4 Franks' lemma for C^2-Mañé perturbations of Riemannian metrics 58
4.1 Introduction 58
4.2 Preliminaries in control theory 64
4.2.1 The End-Point mapping 64
4.2.2 First order controllability results 66
4.2.3 Second-order controllability results 67
4.2.4 Some sufficient condition for local openness 68
4.2.5 Proof of Proposition 4.2.2 70
4.2.6 Proof of Proposition 4.2.4 82
4.3 Proof of Theorem 4.1.1 85
4.4 Proofs of Theorems 4.1.2 and 4.1.3 92
4.4.1 Dominated splittings and hyperbolicity 92
4.4.2 Proof of Theorem 4.1.3 97
4.4.3 Main ideas to show Theorem 4.4.3 97
4.5 Appendix : Proof of Lemma 4.2.10 103

Bibliography 113

Chapitre 1

Introduction

A classical subject of the theory of dynamical systems is the stability conjecture [67]. Let us recall some main definitions required to state this conjecture.
Let M be a closed smooth manifold. Denote by $\mathrm{Diff}(M)$ the space of C^1 diffeomorphisms of M endowed with the C^1 topology. First, we define the structural stability.

Definition 1.0.1 *We say that $f \in$ Diff(M) is structurally stable if it has a neighborhood $\mathbf{V}$ in Diff(M) such that for every $g \in \mathbf{V}$ there exists a homeomorphism $h : M \to M$ such that $g = hfh^{-1}$.*

Hyperbolic sets play an important role in the description of dynamical properties of orbits.

Definition 1.0.2 *A set $\Lambda \subset M$ is a hyperbolic set of $f \in$ Diff(M) if it is compact, f-invariant (i.e $f(\Lambda) = \Lambda$) and there exists a continuous splitting $TM_{|\Lambda} = E^s \oplus E^u$ invariant under the derivative of f such that there exist $K > 0$, $0 < \lambda < 1$, satisfying*

$$\left\|(D_x f^n)_{|E^s_x}\right\|_X \leq k\lambda^n \quad \textit{and} \quad \left\|(D_x f^{-n})_{|E^u_x}\right\|_X \leq k\lambda^n$$

for every $x \in \Lambda$ and $n \geq 0$.

A more general notion than the periodic points are nonwandering points.

Definition 1.0.3 *$x \in M$ is a nonwandering point of $f \in$ Diff(M) if for every neighborhood $\mathbf{U}$ of x in M there exists $n \neq 0$ such that $f^n(\mathbf{U}) \cap \mathbf{U} \neq \emptyset$.*

Denote by $\Omega(f)$ the set of nonwandering points of f and $\mathrm{Per}(f)$ the set of periodic points of f. $\Omega(f)$ is a closed subset of M. A less general notion than the structural stability is the Ω-stability.

Definition 1.0.4 *A diffeomorphism f is Ω-stable if for every g near f there exists a homeomorphism $h : \Omega(f) \to \Omega(g)$ such that $g_{|\Omega(g)} = hfh^{-1}_{|\Omega(g)}$.*

Let us now define a specific type of diffeomorphisms namely the Axiom A diffeomorphism.

Definition 1.0.5 *We say that $f \in Diff(M)$ satisfies Axiom A if $\Omega(f)$ is hyperbolic and $\overline{Per(f)} = \Omega(f)$.*

The stable manifold of a given point x is given by

$$W^s(x) = \Big\{ y | \lim_{n \to +\infty} (f^n(x), f^n(y)) = 0 \Big\}$$

and its unstable manifold is given by

$$W^u(x) = \Big\{ y | \lim_{n \to +\infty} (f^{-n}(x), f^{-n}(y)) = 0 \Big\}.$$

If f is an Axiom A diffeomorphism, $\Omega(f)$ has a unique decomposition $\Omega(f) = \Omega_1 \cup ... \cup \Omega_l$ in disjoint, compact and transitive sets (transitive meaning that each Ω_i contains a point whose orbit is dense in Ω_i). These sets are called basic sets. The stable (unstable) manifold of a basic set is defined as the union of the stable (unstable) manifolds of its points. Now we define the no cycles condition.

Definition 1.0.6 *We say that f satisfies the no cycles condition if for every family $\Omega_{i_1}, ..., \Omega_{i_n}$ of basic sets such that the stable manifold of Ω_{i_j} has nonempty intersection with the unstable manifold of $\Omega_{i_{j+1}}$ for every $1 \leq j < n$, the stable manifold of Ω_{i_n} does not intersect the unstable manifold of Ω_{i_1}.*

In [67], Smale provides sufficients conditions of Ω-stability.

Theorem 1.0.7 *An Axiom A diffeomorphism which satisfy the no cycles condition is Ω-stable.*

Now, we are ready to state the stability conjecture due to Smale [67].

Conjecture 1.0.8 *(The Stability Conjecture)*
Ω-stable diffeomorphisms satisfy axiom A and the no cycles condition.

In the early of the 70's years, mathematicians began to reflect how prove or disprove this conjecture. In fact, in 1970 Palis ([54]) proved that an Ω-stable diffeomorphism that satisfies Axiom A also satisfies the no cycles condition. Moreover, in 1971 Franks

([23]) proved that an Ω-stable diffeomorphism has only hyperbolic periodic points (a periodic point x of a diffeomorphism g is said to be hyperbolic if the eigenvalues of $D_x g^m : T_x M \to T_x M$ have modulus $\neq 1$ where m is the period of x). To prove this, Franks used his well known lemma (The Franks lemma) showing how to perturb the derivative of a diffeomorphism along a periodic orbit by small perturbation of the diffeomorphism on a neighborhood of the orbit. This constitutes a remarquable successful step used to prove the stability conjecture for surfaces. Let $\mathcal{F}(M)$ be the set of diffeomorphisms $f \in \mathrm{Diff}(M)$ that have a neighborhood $\mathbf{V}$ such that for all $g \in \mathbf{V}$ every periodic point x of g is hyperbolic. So thanks to Franks, if f is Ω-stable then $f \in \mathcal{F}(M)$. But in [48, Lemma 3.1] Mañé proved that if $f \in \mathcal{F}(M)$ then $\overline{\mathrm{Per}(f)} = \Omega(f)$. So to finish the proof of the stability conjecture, it remains to show that if $f \in \mathcal{F}(M)$ then $\Omega(f)$ is a hyperbolic set. The last statement was proved by Mañé (see [46]) in the case of surfaces ($dim(M) = 2$).
Concepts that we have described above concern only C^1 diffeomorphisms. An interessant subject is describing stability and hyperbolicity properties of geodesic flows. Let M be a closed riemannian manifold endowed with a C^∞ riemannian metric g and let $\phi_t = \phi_t^g$ be the geodesic flow of g on the unit tangent bundle $S^g M$. Given a point $(p, v) \in S^g M$, $\phi_t(p, v) = (\gamma(t), \dot{\gamma}(t))$, where $\gamma(t)$ is the unit geodesic of M such that $\gamma(0) = p$ and $\dot{\gamma}(0) = v$. Let $[g^{ij}]$ be the inverse matrix of $[g_{ij}]$. The geodesic flow is conjugate to the hamiltonian flow of the function

$$H(x, y) = \frac{1}{2} \sum_{i,j} g^{i,j}(x) y_i y_j.$$

Hamilton's equations are

$$\frac{d}{dt} x_i = \sum_j g^{i,j}(x) y_j,$$

$$\frac{d}{dt} y_k = -\frac{1}{2} \sum_{i,j} \frac{\partial}{\partial x_k} g^{i,j}(x) y_i y_j.$$

An invariant set Λ of a smooth flow $\psi_t : Q \longrightarrow Q$ acting without singularities on a complete manifold Q is called hyperbolic if there exist constants, $C > 0$, $\lambda \in (0, 1)$, and a direct sum decomposition $T_p Q = E^s(p) \oplus E^u(p) \oplus X(p)$ for every $p \in \Lambda$, where $X(p)$ is the subspace tangent to the orbits of ψ_t, such that

1. $\| D\psi_t(W) \| \leq C\lambda^t \| W \|$ for every $W \in E^s(p)$ and $t \geq 0$,
2. $\| D\psi_t(W) \| \leq C\lambda^{-t} \| W \|$ for every $W \in E^u(p)$ and $t \leq 0$.

When the set Λ is the whole Q the flow is called Anosov. Denote by $A(M)$ the set of Anosov geodesic flows of the manifold M. A closely related with hyperbolicity of dynamical systems is the concept of expansivity.

Definition 1.0.9 *A non-singular smooth flow $\phi_t : Q \longrightarrow Q$ acting on a complete Riemannian manifold Q is ϵ-expansive if given $x \in Q$ we have that for each $y \in Q$ such that there exists a continuous surjective function $\rho : \mathbb{R} \longrightarrow \mathbb{R}$ with $\rho(0) = 0$ satisfying*

$$d(\phi_t(x), \phi_{\rho(t)}(y)) \leq \epsilon,$$

for every $t \in \mathbb{R}$ then there exists $t(y)$, $\mid t(y) \mid < \epsilon$ such that $\phi_{t(y)}(x) = y$.

A smooth non-singular flow is called expansive if it is expansive for some $\epsilon > 0$. The number of closed orbits of an expansive geodesic flow is finite. Let $E^k(M)$ be the set of expansive geodesic flows of riemannian metric of M endowed with the C^k topology. First interessant results describing hyperbolicity properties of geodesic flows have been provided by Ruggiero (see [64]).

Theorem 1.0.10 *Let (M, g) be a compact Riemannian manifold of dimension n. If the geodesic flow ϕ_t belongs to int(E^1) the set $\overline{P(\phi)}$ -the closure of the set $P(\phi)$ of periodic orbits of ϕ_t- is a hyperbolic set.*

Using this result, Ruggiero caracterised Anosov flows in surfaces. Recall that $A(M)$ is the set of Anosov geodesic flows of the manifold M.

Theorem 1.0.11 *Let M be a compact manifold of dimension 2. Then $int_{C^1}(E^1(M)) = A(M)$.*

One of the aims of this thesis is to describe similar properties in the C^2 topology. As we stated before, the Franks lemma (for diffeomorphisms) has a crucial role in the proof of the stability conjecture. The Franks lemma has since been proven in other interesting contexts such as geodesic flows (see [15] and [12]) and more generally Hamiltonians flows (see [79]). In this thesis, we focus on the Franks lemma for geodesic flows. This problem was first studied in the particular case of surfaces by Contreras and Paternain (see [15, Theorem 4.1]). They proved that on any surface, the linearized Poincaré map along any geodesic segment of length 1 can be freely perturbed in a neighborhood inside Sp(1) by a C^2-small perturbation of the metric, where for every $m \in \mathbb{N}^*$, the symplectic group Sp(m) is defined by

$$\mathrm{Sp}(m) := \Big\{ A \in M_{2m}(\mathbb{R}) \mid A^* \mathbb{J} A = \mathbb{J} \Big\},$$

with

$$\mathbb{J} = \begin{bmatrix} 0 & I_m \\ -I_m & 0 \end{bmatrix}.$$

In 2010, Contreras studied the higher-dimensional analogue (see [12, Theorem 7.1]). He generalized the previous result for a special set of metrics : those such that

every geodesic segment of length $\frac{1}{2}$ has a point whose curvature matrix has all its eigenvalues distinct and separated by a uniform bound.
Given a geodesic arc of length 1

$$\gamma : [0,1] \longrightarrow S^g M,$$

with unit speed and Σ_0 and Σ_1 transverse sections at $\gamma(0)$ and $\gamma(1)$ respectively. Let $\mathbb{P}_g(\Sigma_0, \Sigma_1, \gamma)$ be a Poincaré map going from Σ_0 to Σ_1. One can choose Σ_0 and Σ_1 such that the *linearized Poincaré* map

$$P_g(\gamma)(1) := d_{\gamma(0)}\mathbb{P}_g(\Sigma_0, \Sigma_1, \gamma)$$

is a symplectic endomorphism of $\mathbb{R}^{n-1} \times (\mathbb{R}^{n-1})^*$ (in local coordinates). Let $\mathcal{R}^k(M)$, $k \in \mathbb{N} \cup \{+\infty\}$ be the set of all C^k Riemannian metrics g on M. If $n \geq 3$, we denote by $\mathcal{G}_1$ the set of Riemannian metrics on M such that every unit geodesic segment of lenght 1 admits a point where the curvature matrix has distinct eigenvalues. Denote by $\mathcal{R}^k(M, \mathcal{G}_1)$ the set of all Riemannian metrics g on M such that if $n = 2$, $g \in \mathcal{R}^k(M)$ and for $n \geq 3$, $g \in \mathcal{R}^k(M) \cap \mathcal{G}_1$. For every $k \geq 2$, $\mathcal{R}^k(M, \mathcal{G}_1)$ is an open and dense subset of $\mathcal{R}^k(M)$. Consider the map $S : \mathcal{R}^k(M, \mathcal{G}_1) \longrightarrow \mathrm{Sp}(n-1)$ given by $S(\bar{g}) = P_{\bar{g}}(\gamma)(1)$. The following theorem summarizes the Franks lemma for geodesic flows on surfaces and its higher-dimensional analogue (under the Contreras assumption on the spectrum of the curvature matrix) with estimates on the size of perturbation in terms of the radius of the ball of $\mathrm{Sp}(n-1)$.

Theorem 1.0.12 *Let $g_0 \in \mathcal{R}^k(M, \mathcal{G}_1), 2 \leq k \leq \infty$. There exists $\bar{r}, K > 0$ such that for any geodesic arc γ of g_0 of lenght 1 and any $r \in (0, \bar{r})$,*

$$B\Big(S(g_0), Kr\Big) \cap Sp(n-1) \subset S\Big(B_{C^k}(g_0, r)\Big).$$

In [12], Contreras used the Franks lemma to prove that a C^2 generic Riemannian metric has a non-trivial hyperbolic basic set in its geodesic flow. Recall that a non-trivial hyperbolic basic set is a locally maximal compact invariant subset $\Lambda \subset S^g M$ which is hyperbolic, has a dense orbit and which is not a single periodic orbit. Recall that a closed geodesic is said to be hyperbolic if its linearized Poincaré map has no eigenvalue of modulus 1. Given a set $A \subset S^g M$, define

$$\mathcal{P}(g) := \Big\{\gamma \mid \gamma \,\text{periodic orbit for}\, g\Big\},$$

$$\mathcal{P}(g, A) := \Big\{\gamma \in \mathcal{P}(g) \mid \gamma(\mathbb{R}) \subset A\Big\},$$

$$\mathrm{Per}(g, A) := \cup_{\gamma \in \mathcal{P}(g,A)} \gamma(\mathbb{R}),$$

$$\mathcal{H}(A) := \Big\{ g \mid \forall \gamma \in \mathcal{P}(g, A), \gamma \, is \, hyperbolic \Big\},$$
$$\mathcal{F}^2(A) := int_{C^2} \mathcal{H}(A).$$

To prove the previous result, Contreras shows a result similar to Theorem 1.0.10.

Theorem 1.0.13 *([12, Theorem E]) If $g \in \mathcal{G}_1 \cap \mathcal{F}^2(A)$, then $\Lambda = \overline{Per(g, A)}$ is a hyperbolic set.*

This theorem is proved by adapting R. Mañé's theory of stable hyperbolicity, developed for the stability conjecture in [46], to the case of geodesic flows. Let us explain why the Franks lemma plays here also a crucial role to prove this theorem but before this let us recall some definitions.
We say that a linear map $T : \mathbb{R}^{2n} \to \mathbb{R}^{2n}$ is hyperbolic if it has no igenvalue of modulus 1. Equivalenty, T is hyperbolic if there is a splitting $\mathbb{R}^{2n} = E^s \oplus E^u$ and an iterate $M \in \mathbb{Z}^+$ such that $T(E^s) = E^s, T(E^u) = E^u$ and

$$\| \, T^M_{|E^s} \, \| < \frac{1}{2} \quad and \quad \| \, (T_{|E^u})^{-M} \, \| < \frac{1}{2}.$$

The subspaces E^s and E^u are called the stable subspace and unstable subspace of T. Let $\psi : \mathbb{Z} \longrightarrow GL(n)$ be a sequence of such isomorphisms. Fix $j \in \mathbb{Z}$ and denote by $E^s_j(\psi)$ the set of vectors $v \in \mathbb{R}^n$ such that

$$\sup_{n \geq 0} \Big\{ \big\| (\Pi^n_{i=0} \psi_{j+i}) \, v \big\| \Big\} < \infty,$$

and by $E^u_j(\psi)$ the set of vectors $v \in \mathbb{R}^n$ such that

$$\sup_{n \geq 0} \Big\{ \big\| (\Pi^n_{i=0} \psi_{j-1-i})^{-1} \, v \big\| \Big\} < \infty.$$

Let us say that the sequence ψ is hyperbolic if $E^s_j(\psi) \bigoplus E^u_j(\psi) = \mathbb{R}^n$ for every $j \in \mathbb{Z}$. Actually, this definition is equivalent to require the above direct sum decomposition for some j. A periodic sequence ψ is characterized by the existence of $n_0 > 0$ such that $\psi_{j+n_0} = \psi_j$ for every j. It is easy to check that the hyperbolicity of a periodic sequence ψ is equivalent to the classical hyperbolicity of the linear map $\prod_{j=0}^{n_0-1} \psi_j$. Now, let

$$\Big\{ \psi^\alpha, \alpha \in \Lambda \Big\}$$

be a family of periodic sequences of linear maps indexed in a set Λ. Let us define the distance $d(\psi, \eta)$ between two families of periodic sequences indexed in Λ by

$$d(\psi, \eta) = \sup_{n \in \mathbb{Z}, \alpha \in \Lambda} \Big\{ \| \, \psi^\alpha_n - \eta^\alpha_n \, \| \Big\}.$$

We say that the family $\{\psi^\alpha, \alpha \in \Lambda\}$ is hyperbolic if every sequence in the family is hyperbolic. Let us call by periodically equivalent two families ψ^α, η^α for which given any α, the minimum periods of ψ^α and η^α coincide. Following Mañé, we say that the family $\{\psi^\alpha, \alpha \in \Lambda\}$ is uniformly hyperbolic if there exists $\epsilon > 0$ such that every periodically equivalent family η^α such that $d(\psi, \eta) < \epsilon$ is also hyperbolic.
The geodesic flow of a Riemannian manifold (M, g) will be denoted by ϕ_t, the flow acts on the unit tangent bundle S^gM, a point $\theta \in S^gM$ has canonical coordinates $\theta = (p, v)$ where $p \in M$, $v \in T_pM$, and γ_θ denotes the unit speed geodesic with initial conditions $\gamma_\theta(0) = p$, $\gamma'_\theta(0) = v$. Let $N_\theta \subset T_\theta S^gM$ be the plane of vectors which are perpendicular to the geodesic flow with respect to the Sasaki metric (see for example [66]). The collection of these planes is preserved by the action of the differential of the geodesic flow :$D_\theta\phi_t(N_\theta) = N_{\phi_t(\theta)}$ for every θ and $t \in \mathbb{R}$. Let us consider a geodesic arc, of length T

$$\gamma_\theta : [0, T] \longrightarrow M,$$

and let Σ_0 and Σ_T be local transverse sections for the geodesic flow which are tangent to N_θ and $N_{\phi_T(\theta)}$ respectively. Let $\mathbb{P}_g(\Sigma_0, \Sigma_T, \gamma)$ be a Poincaré map going from Σ_0 to Σ_T. In horizontal-vertical coordinates of N_θ, the differential $D_\theta\phi_T$ that is the *linearized Poincaré map*

$$P_g(\gamma)(T) := D_\theta\mathbb{P}_g(\Sigma_0, \Sigma_T, \gamma)$$

is a symplectic endomorphism of $\mathbb{R}^{(2n-2)} \times \mathbb{R}^{(2n-2)}$. This endomorphism can be expressed in terms of the Jacobi fields of γ_θ which are perpendicular to $\gamma'_\theta(t)$ for every t :

$$P_g(\gamma)(T)(J(0), \dot{J}(0)) = (J(T), \dot{J}(T)),$$

where $\dot{J}$ denotes the covariant derivative along the geodesic. We can identify the set of all symplectic endomorphisms of $\mathbb{R}^{2n-2} \times \mathbb{R}^{2n-2}$ with the symplectic group

$$\mathrm{Sp}(n-1) := \left\{ X \in \mathbb{R}^{(2n-2)\times(2n-2)}; X^*\mathbb{J}X = \mathbb{J} \right\},$$

where X^* denotes the transpose of X and

$$\mathbb{J} = \begin{bmatrix} 0 & I_{n-1} \\ -I_{n-1} & 0 \end{bmatrix}.$$

Let l be the injectivity radius of g. For each $\alpha \in \mathcal{P}(g, A)$ let $T = T(\alpha)$ be the period of α and choose $0 = t_0 < t_1 < t_2 < ... < t_m = T$ such that $t_{i+1} - t_i \in [\frac{1}{4}l, \frac{1}{2}l]$. For every $i = 0, ..., m$, denote by Σ_{t_i} the transverse section for α at $\alpha(t_i)$ which is tangent to $N_{\alpha(t_i)}$. Let $\psi^\alpha : \mathbb{Z} \to \mathrm{Sp}(n)$ be the periodic sequence of period m such that for every $i = 0, ..., m-1$, ψ^α_i is the matrix of $D_{\alpha(t_i)}\phi^g_{t_{i+1}-t_i} = P_g(\alpha)(t_{i+1} - t_i) :=$

$D_{\alpha(t_i)}\mathbb{P}_g(\Sigma_{t_i}, \Sigma_{t_{i+1}}, \alpha)$ where $\mathbb{P}_g(\Sigma_{t_i}, \Sigma_{t_{i+1}}, \alpha)$ is the Poincaré map going from Σ_{t_i} to $\Sigma_{t_{i+1}}$. The Franks lemma is necessary to show the following lemma proved in the case of surfaces by Contreras and Paternain in [15, Lemma 5.6]. In the case of general Riemannian manifold under an additional assumption on the curvatures, it is showed by Contreras in [12, Lemma 9.1].

Lemma 1.0.14 *If $g \in \mathcal{G}_1 \cap \mathcal{F}^2(A)$, then the family $\psi = \{\psi^\alpha\}_{\alpha \in \mathcal{P}(g,A)}$ is uniformly hyperbolic.*

These interessant results obtained thanks to the Franks lemma motivate us to focus carefully on this lemma. In [12], the author says that this perturbation lemma is "the main technical difficulty of the paper". In fact, its proof was very long and technical. In this thesis, we provide a simple proof of the Franks lemma using geometric control tools. Such techniques have been initially introduced by Rifford and Ruggiero in [62]. Moreover, we obtained a Franks lemma at lower order ($r < K\sqrt{\delta}$) without the Contreras assumption and we apply this to extend some results (similar to Theorem 1.0.13) concerning the characterization of hyperbolic geodesic flows.

Given a geodesic $\gamma_\theta : [0,T] \to M$, an interval $[t_1, t_2] \subset [0,T]$ and $\rho > 0$, we denote by $\mathcal{C}_g\left(\gamma_\theta\big([t_1,t_2]\big);\rho\right)$ the open geodesic cylinder along $\gamma_\theta\big([t_1,t_2]\big)$ of radius ρ, that is the open set defined by

$$\mathcal{C}_g\left(\gamma_\theta\big([t_1,t_2]\big);\rho\right) :=$$
$$\Big\{p \in M \mid \exists t \in (t_1,t_2) \text{ with } d_g\big(p,\gamma_\theta(t)\big) < \rho \text{ and } d_g\big(p,\gamma_\theta([t_1,t_2])\big) = d_g\big(p,\gamma_\theta(t)\big)\Big\},$$

where d_g denotes the geodesic distance with respect to g. Our main result is the following.

Theorem 1.0.15 (Franks' Lemma) *Let (M,g) be a smooth compact Riemannian manifold of dimension ≥ 2. For every $T > 0$ there exist $\delta_T, \tau_T, K_T > 0$ such that the following property holds :*
For every geodesic $\gamma_\theta : [0,T] \to M$, there are $\bar{t} \in [0, T - \tau_T]$ and $\bar{\rho} > 0$ with

$$\mathcal{C}_g\Big(\gamma_\theta\left(\left[\bar{t}, \bar{t} + \tau_T\right]\right);\bar{\rho}\Big) \cap \gamma_\theta([0,T]) = \gamma_\theta\left(\left(\bar{t}, \bar{t} + \tau_T\right)\right),$$

such that for every $\delta \in (0, \delta_T)$, for each symplectic map A in the open ball (in $Sp(n-1)$) centered at $P_g(\gamma)(T)$ of radius δ and for every $\rho \in (0, \bar{\rho})$, there exists a C^∞ metric h in M that is conformal to g, $h_p(v,w) = (1+\sigma(p))g_p(v,w)$, such that :

1. *the geodesic $\gamma_\theta : [0,T] \longrightarrow M$ is still a geodesic of (M,h),*
2. *$Supp(\sigma) \subset \mathcal{C}_g\left(\gamma_\theta\left(\left[\bar{t}, \bar{t} + \tau_T\right]\right);\rho\right)$,*
3. *$P_h(\gamma_\theta)(T) = A$,*

4. the C^2 norm of the function σ is less than $K_T\sqrt{\delta}$.

Theorem 1.0.15 improves a previous result by Contreras [12, Theorem 7.1] which gives a controllability result at first order under an additional assumption on the curvatures along the initial geodesic. Other proofs of Contreras Theorem can also be found in [78] and [42]. The Lazrag proof follows already the ideas from geometric control introduced in [62] to study controllability properties at first order. Our new Theorem 1.0.15 shows that controllability holds at second order without any assumption on curvatures along the geodesic. Its proof amounts to study how small conformal perturbations of the metric g along $\Gamma := \gamma([0,T])$ affect the differential of $\mathbb{P}_g(\Sigma_0, \Sigma_T, \gamma)$. This can be seen as a problem of local controllability along a reference trajectory in the symplectic group. As in [62], The idea is to see the Hessian of the conformal factor along the initial geodesic as a control and to obtain Theorem 1.0.15 as a uniform controllability result at second order for a control system of the form

$$\dot{X}(t) = A(t)X(t) + \sum_{i=1}^{k} u_i(t)B_iX(t), \qquad \text{for a.e.} \quad t,$$

in the symplectic group $\mathrm{Sp}(n-1)$.
We apply Franks' Lemma to extend some results concerning the characterization of hyperbolic geodesic flows in terms of the persistence of some C^1 generic properties of the dynamics. These results are based on well known steps towards the proof of the C^1 structural stability conjecture for diffeomorphisms. Let us first introduce some notations. Given a smooth compact Riemannian manifold (M, g), we say that a property P of the geodesic flow of (M, g) is ϵ-C^k-persistent from Mañé's viewpoint if for every C^∞ function $f : M \longrightarrow \mathbb{R}$ whose C^k norm is less than ϵ we have that the geodesic flow of the metric $(M, (1+f)g)$ has property P as well. By Maupertuis' principle, this is equivalent to the existence of an open C^k-ball of radius $\epsilon' > 0$ of functions $q : M \longrightarrow \mathbb{R}$ such that for every C^∞ function in this open ball the Euler-Lagrange flow of the Lagrangian $L(p, v) = \frac{1}{2}g_p(v, v) - q(p)$ in the level of energy equal to 1 has property P. This definition is inspired by the definition of C^{k-1} persistence for diffeomorphisms : a property P of a diffeomorphism $f : M \longrightarrow M$ is called ϵ-C^{k-1} persistent if the property holds for every diffeomorphism in the ϵ-C^{k-1} neighborhood of f. It is clear that if a property P is ϵ-C^1 persistent for a geodesic flow then the property P is ϵ'-C^2 persistent from Mañé's viewpoint for some ϵ'.

Theorem 1.0.16 *Let (M, g) be a smooth compact Riemannian manifold of dimension ≥ 2 such that the periodic orbits of the geodesic flow are C^2-persistently hyperbolic from Mañé's viewpoint. Then the closure of the set of periodic orbits of the geodesic flow is a hyperbolic set.*

An interesting application of Theorem 1.0.16 is the following extension of Theorem A in [64] : C^1 persistently expansive geodesic flows in the set of Hamiltonian flows of S^gM are Anosov flows.

Theorem 1.0.17 *Let (M, g) be a smooth compact Riemannian manifold, suppose that either M is a surface or $\dim M \geq 3$ and (M, g) has no conjugate points. Assume that the geodesic flow is C^2 persistently expansive from Mañé's viewpoint, then the geodesic flow is Anosov.*

Having completed the presentation and the explanation of the most part of our research work, we now proceed to an inventory, chapter by chapter, of the present results of this thesis.

In the next chapter we describe some well known results in geometric control theory such as the Chow-Rashevsky Theorem, the Kalman rank condition, the End-Point Mapping and the linear test. Moreover, we define and study briefly local controllability around a reference control at first and second order.

In chapter 3, we provide an elementary proof of the Franks lemma for geodesic flows using basic tools of geometric control theory. This chapter is the subject of an article to be published ([42]).

The last chapter is devoted to the proofs of Theorem 1.0.15, Theorem 1.0.16 and Theorem 1.0.17. In this chapter, we introduce with more details notions of local controllability at first and second order. In fact, we provide a second order controllability result whose proof is long and technical. This chapter is the subject of an article written in collaboration with Ludovic Rifford and Raphael Ruggiero ([43]).

Chapitre 2

Geometric control methods in finite dimension

2.1 Introduction

Let M be a smooth (C^∞) n-dimensional manifold with tangent space at x denoted T_xM. A general control system has the form

$$\dot{x} = f(x, u), \tag{2.1}$$

where
- x is the state in M ;
- u is the control in $\mathbb{R}^m$;
- $f(\cdot, u)$ is a vector field on M $\forall u$.

Proposition 2.1.1 *Suppose that f is locally Lipschitz relative to the second variable. For every $x \in M$ and every control $u \in L^2([0,T], \mathbb{R}^m)$, the Cauchy problem*

$$\begin{cases} \dot{x}(t) = f(x(t), u(t)) \quad a.e \quad t \in [0,T], \\ x(0) = x \end{cases}$$

admits a unique solution

$$x(\cdot) = x(\cdot; x, u) : [0, T'] \longrightarrow M,$$

with $T' \leq T$.

Controllability is the ability to steer a system from an initial state to a final state using the available controls. In fact, studying the controllability of a control system returns to focus on the following question :
Given two points x_1, x_2 in the state space M and $T > 0$, can we find a control $u \in L^2([0,T],\mathbb{R}^m)$ such that the solution of

$$\begin{cases} \dot{x}(t) = f(x(t),u(t)) \quad a.e \quad t \in [0,T], \\ x(0) = x_1 \end{cases} \tag{2.2}$$

satisfies

$$x(T) = x_2?$$

There are three main types of controllability : global controllability, local controllability at an equilibrium point and local controllability along a reference trajectory (see [16]). In this chapter we define and study local controllability around a reference control. Before this, we recall some well known results about global controllability and small time local controllability at an equilibrium point.

2.2 A global controllability result : the Rashevsky-Chow Theorem

Definition 2.2.1 *A general control system (2.1) is said to be globally controllable on M if for any x_1, $x_2 \in M$ and $T > 0$, there exists a control $u \in L^2([0,T],\mathbb{R}^m)$ such that the solution of the Cauchy problem (2.2) starting at x_1 satisfies $x(T) = x_2$.*

Given a family $\mathcal{F}$ of smooth vector fields on M, we denote by $Lie\,\{\mathcal{F}\}$ the Lie algebra generated by $\mathcal{F}$. It is the smallest vector subspace S of smooth vector fields containing $\mathcal{F}$ that also satisfies

$$[X,Y] \in S \quad \forall X \in \mathcal{F}, \forall Y \in S.$$

The following theorem provides sufficient conditions of global controllability for a driftless affine control system. It was proved independently by Peter Rashevsky in [59] and by Wei-Liang Chow in [10]. Other proofs are given by Rifford in [61] and Jean in [37].

Theorem 2.2.2 *(Chow 1939, Rashevsky 1938)*
Let M be a smooth connected manifold and $f_1, ..., f_m$ be m smooth vector fields on M. Assume that

$$Lie\,\{f_1, ..., f_m\}\,(x) = T_xM \qquad \forall x \in M$$

Then the control system

$$\dot{x} = \sum_{i=1}^{m} u_i f_i(x)$$

is globally controllable on M.

Remark 2.2.3 *The converse of the Chow-Rashevsky Theorem is false in general. It is true when M and the vector fields $f_1, ..., f_m$ are in the analytic category.*

An application of the previous theorem is the classical example of the car.

Example 2.2.4 *The state of the car is given by the position of its center of mass $(x_1, x_2) \in \mathbb{R}^2$ and the orientation angle $\theta \in S^1$ which is relative to the position direction of the axix x_1.*
So the state space is

$$M = \left\{x = (x_1, x_2, \theta) | x_1, x_2 \in \mathbb{R}, \theta \in \mathbb{S}^1\right\} = \mathbb{R}^2 \times \mathbb{S}^1.$$

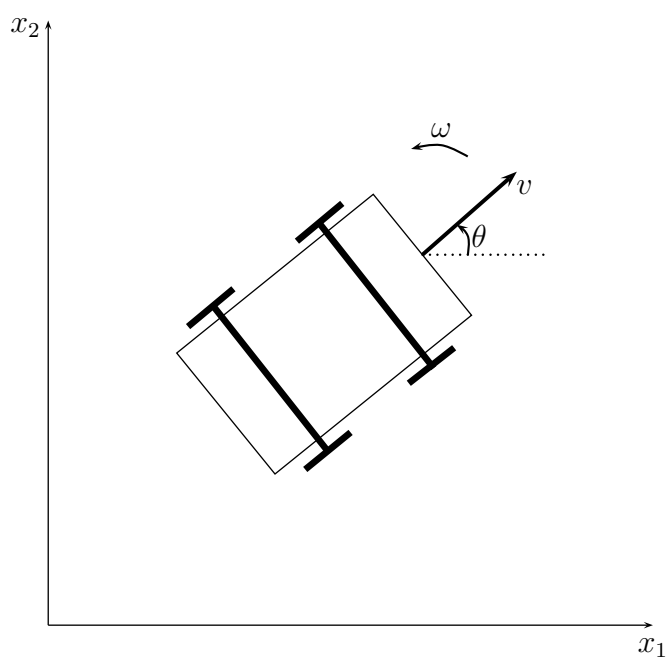

FIGURE 2.1 – Model of the car

There are two possible kinds of motion :
• *Linear motion : drive the car forward and backward with some fixed linear velocity* $v = \sqrt{\dot{x}_1^2 + \dot{x}_2^2}$ *, that is*

$$\begin{cases} \dot{x}_1 = v\, cos\theta, \\ \dot{x}_2 = v\, sin\theta, \\ \dot{\theta} = 0. \end{cases}$$

• *Rotational motion : turn the car around its center of mass with some fixed angular velocity* $\omega = \dot{\theta}$ *:*

$$\begin{cases} \dot{x}_1 = 0, \\ \dot{x}_2 = 0, \\ \dot{\theta} = \omega. \end{cases}$$

In vector form we have

$$x = \begin{pmatrix} x_1 \\ x_2 \\ \theta \end{pmatrix}, g_1(x) = \begin{pmatrix} cos\theta \\ sin\theta \\ 0 \end{pmatrix} \text{ and } g_2(x) = \begin{pmatrix} 0 \\ 0 \\ 1 \end{pmatrix}.$$

Combining both kinds of motion, we obtain

$$\dot{x} = v g_1(x) + \omega g_2(x).$$

It is a driftless affine control system.
We have

$$[g_1, g_2](x) = \begin{pmatrix} sin\theta \\ -cos\theta \\ 0 \end{pmatrix}.$$

So

$$Lie\Big\{g_1, g_2\Big\}(x) = Span\Big\{g_1(x), g_2(x), [g_1, g_2](x)\Big\} = \mathbb{R}^3 \qquad \forall x = (x_1, x_2, \theta).$$

Hence the system is globally controllable.

The next section focuses on the controllability of linear control systems.

2.3 Controllability of linear control systems

Let T_0, T_1 be two real numbers such that $T_0 < T_1$ and let $A : (T_0, T_1) \to M_n(\mathbb{R})$ and $B : (T_0, T_1) \to M_{n,m}(\mathbb{R})$ be two maps of class C^∞ on $[T_0, T_1]$, where $M_{n,m}(\mathbb{R})$

denote the set of real $n \times m$-matrices.
Consider the time-varying linear control system

$$\dot{x} = A(t)x + B(t)u,\ t \in [T_0, T_1], \tag{2.3}$$

where, at time $t \in [T_0, T_1]$, the state is $x(t) \in \mathbb{R}^n$ and the control is $u(t) \in \mathbb{R}^m$.

Definition 2.3.1 *The linear time-varying control system (2.3) is controllable on $[T_0, T_1]$ if for any x_0, $x_1 \in \mathbb{R}^n$, there exists a control $u \in L^2((T_0, T_1), \mathbb{R}^m)$ such that the solution of the Cauchy problem*

$$\dot{x}(t) = A(t)x(t) + B(t)u(t),\ x(T_0) = x_0$$

satisfies $x(T_1) = x_1$.

Let us define the controllability Gramian of the control system (2.3).

Definition 2.3.2 *The controllability Gramian of the control system*

$$\dot{x} = A(t)x + B(t)u,\ t \in [T_0, T_1]$$

is the symmetric $n \times n$-matrix

$$\mathcal{G} := \int_{T_0}^{T_1} R(T_1, \tau)B(\tau)B(\tau)^{tr}R(T_1, \tau)^{tr}\, d\tau,$$

where R is the resolvent of the time-varying linear system $\dot{x} = A(t)x$ and M^{tr} denotes the transpose of such matrix M.

The following theorem provides a necessary and sufficient condition of the time-varying linear system (2.3) (see [39, Theorem 5] and [16, Theorem 1.11]).

Theorem 2.3.3 *The linear time varying control system $\dot{x} = A(t)x + B(t)u$ is controllable if and only if its controllability Gramian is invertible.*

Although the previous theorem gives a necessary and sufficient condition to characterize the controllability of the linear system (2.3), in general it is difficult to verify whether that condition is satisfied or not because the controllability Gramian matrix is expressed in terms of the resolvent of a time-varying linear system, such resolvent can be computed only for a very little number of systems. So it is interessant to provide a simpler sufficient condition of controllability for the linear control system (2.3).
Let us define, by induction on i a sequence of maps $B_i \in C^\infty((T_0, T_1), M_{n,m}(\mathbb{R}))$ in the following way :

$$B_0(t) := B(t),\ B_i(t) := \dot{B}_{i-1}(t) - A(t)B_{i-1}(t),\ \forall t \in [T_0, T_1].$$

Theorem 2.3.4 *(see [16, Theorem 1.18])*
Assume that, for some $\bar{t} \in [T_0, T_1]$,

$$Span\{B_i(\bar{t})u;\ u \in \mathbb{R}^m,\ i \in \mathbb{N}\} = \mathbb{R}^n.$$

Then the linear control system (2.3) is controllable on $[T_0, T_1]$.

Remark 2.3.5 *In general, the sufficient condition given by the previous theorem is not necessary (unless* $n = 1$*, or* A *and* B *are assumed to be analytic).*

Let us now provide two examples of controllable and non controllable time-varying linear control system.

Example 2.3.6 *Consider the linear control system*

$$\dot{x}(t) = A(t)x(t) + B(t)u(t),$$

where

$$x(t) \in \mathbb{R}^3, \quad u(t) \in \mathbb{R}, \quad A(t) = \begin{pmatrix} t & 1 & 0 \\ 0 & t^3 & 0 \\ 0 & 0 & t^2 \end{pmatrix} \quad \text{and} \quad B(t) = \begin{pmatrix} 0 \\ 1 \\ 1 \end{pmatrix}.$$

We have

$$B_0(t) = \begin{pmatrix} 0 \\ 1 \\ 1 \end{pmatrix}, \quad B_1(t) = \begin{pmatrix} -1 \\ -t^3 \\ -t^2 \end{pmatrix},$$

$$B_2(t) = \begin{pmatrix} t + t^3 \\ -3t^2 + t^6 \\ -2t + t^4 \end{pmatrix} \text{and} \quad B_3(t) = \begin{pmatrix} 1 + 5t^2 - t^4 - t^6 \\ -6t + 9t^5 - t^9 \\ -2 + 6t^3 - t^6 \end{pmatrix}.$$

It is clear that

$$Span\{B_i(0)u;\ u \in \mathbb{R},\ i = 0, 1, 2, 3\} = \mathbb{R}^3.$$

So our system is controllable.

Example 2.3.7 *Consider the linear control system*

$$\dot{x}(t) = A(t)x(t) + B(t)u(t),$$

where

$$x(t) \in \mathbb{R}^2, \quad u(t) \in \mathbb{R}, \quad A(t) = \begin{pmatrix} 0 & -1 \\ 1 & 0 \end{pmatrix} \quad \text{and} \quad B(t) = \begin{pmatrix} cost \\ sint \end{pmatrix}.$$

We have

$$B_0(t) = \begin{pmatrix} cost \\ sint \end{pmatrix} \text{ and } \quad B_i(t) = \begin{pmatrix} 0 \\ 0 \end{pmatrix} \quad \forall i \in \mathbb{N}^*.$$

It is clear that for every t

$$Span\,\{B_i(t)u;\, u \in \mathbb{R},\, i \in \mathbb{N}\} \neq \mathbb{R}^2$$

So our system is not controllable.

Suppose now that $A(t)$ and $B(t)$ do not depend on time. We have the famous Kalman rank condition for controllability (see the proofs given by Trélat in [74, Théorème 2.2], Jean in [35, Corollaire 6.1] and Coron in [16, Theorem 1.16]).

Theorem 2.3.8 *The two following assertions are equivalent :*
(i) The time invariant linear control system $\dot{x} = Ax + Bu$ is controllable on $[T_0, T_1]$.
(ii) The Kalman rank condition is satisfied :

$$rk\Big(B, AB, A^2B, ..., A^{n-1}B\Big) = n.$$

Let us now study two examples of controllable and non controllable invariant linear control systems.

Example 2.3.9 *The position of a train on the track is identified by its position $x(t)$. Its acceleration is controlled by*

$$\ddot{x} = u.$$

Let $X = (x, \dot{x}) \in \mathbb{R}^2$ be the state of the system, we obtain

$$\dot{X}(t) = \begin{pmatrix} 0 & 1 \\ 0 & 0 \end{pmatrix} X(t) + \begin{pmatrix} 0 \\ 1 \end{pmatrix} u(t).$$

It is an invariant linear control system of the form $\dot{x}(t) = Ax(t) + Bu(t)$, where

$$A = \begin{pmatrix} 0 & 1 \\ 0 & 0 \end{pmatrix} \quad \text{and} \quad B = \begin{pmatrix} 0 \\ 1 \end{pmatrix}.$$

Moreover, it holds that

$$rk\Big(B, AB\Big) = rk\begin{pmatrix} 0 & 1 \\ 1 & 0 \end{pmatrix} = 2.$$

So the Kalman rank condition is satisfied and the system is controllable.

Example 2.3.10 *Consider the linear control system*

$$\dot{x}(t) = Ax(t) + Bu(t),$$

where

$$x(t) \in \mathbb{R}^3, \quad u(t) \in \mathbb{R}, \quad A = \begin{pmatrix} 1 & -3 & 1 \\ 1 & 0 & 0 \\ -2 & 3 & -2 \end{pmatrix} \quad \text{and} \quad B = \begin{pmatrix} 1 \\ 0 \\ -1 \end{pmatrix}.$$

We have

$$rk\Big(B, AB, A^2B\Big) = rk \begin{pmatrix} 1 & 0 & -3 \\ 0 & 1 & 0 \\ -1 & 0 & 3 \end{pmatrix} = 2 \neq 3.$$

So the Kalman rank condition is not satisfied and the system is not controllable.

In the next section, we study briefly local controllability at an equilibrium point.

2.4 Local controllability at an equilibrium point

Throughout this section, we consider the nonlinear control system

$$\dot{x} = f(x, u), \tag{2.4}$$

where $x \in \mathbb{R}^n$ is the state, $u \in \mathbb{R}^m$ is the control, with $(x, u) \in \mathcal{O}$ where $\mathcal{O}$ is a nonempty open subset of $\mathbb{R}^n \times \mathbb{R}^m$. We assume that $f \in C^\infty(\mathcal{O}, \mathbb{R}^n)$.
First, let us recall the definition of an equilibrium of a control system.

Definition 2.4.1 *An equilibrium of the control system $\dot{x} = f(x, u)$ is a pair $(x_e, u_e) \in \mathcal{O}$ such that*

$$f(x_e, u_e) = 0.$$

In [16], Coron defines small-time local controllability (with controls close to u_e).

Definition 2.4.2 *Let $(x_e, u_e) \in \mathcal{O}$ be an equilibrium of the control system $\dot{x} = f(x, u)$. The control system $\dot{x} = f(x, u)$ is small-time locally controllable at the equilibrium (x_e, u_e) if, for every real number $\epsilon > 0$, there exists a real number $\mu > 0$ such that, for every $x^0 \in B_\mu(x_e) := \big\{x \in \mathbb{R}^n; \big\|x - x_e\big\| < \mu\big\}$ and for every $x^1 \in B_\mu(x_e)$, there exists a mesurable function $u \in L^2([0, \epsilon], \mathbb{R}^m)$ such that*

$$\big\|u(t) - u_e\big\| \leq \epsilon, \ \forall t \in [0, \epsilon],$$

$$\Big(\dot{x} = f(x, u(t)), x(0) = x^0\Big) \Rightarrow \Big(x(\epsilon) = x^1\Big).$$

Usually, to decide whether such a general control system is small-time locally controllable at an equilibrium or not, we begin by studying the controllability of the linearised control system at the equilibrium point.

Definition 2.4.3 *The linearised control system at an equilibrium (x_e, u_e) of the control system $\dot{x} = f(x, u)$ is the linear control system*

$$\dot{x} = \frac{\partial f}{\partial x}(x_e, u_e)x + \frac{\partial f}{\partial u}(x_e, u_e)u,$$

where, at time t, the state is $x(t) \in \mathbb{R}^n$ and the control is $u(t) \in \mathbb{R}^m$.

The following important theorem (see [16, Theorem 3.8]) provides a sufficient condition of small-time local controllability at an equilibrium point.

Theorem 2.4.4 *(The linear test)*
Let $(x_e, u_e) \in \mathcal{O}$ be an equilibrium of the control system $\dot{x} = f(x, u)$. Let us assume that the linearized control system of the control system $\dot{x} = f(x, u)$ at (x_e, u_e) is controllable. Then the nonlinear control system $\dot{x} = f(x, u)$ is small-time locally controllable at (x_e, u_e).

Let us study the example of the inverted pendulum.

Example 2.4.5 *Consider an inverted pendulum with mass m, attached to a carriage of mass M. We shall control its acceleration.*

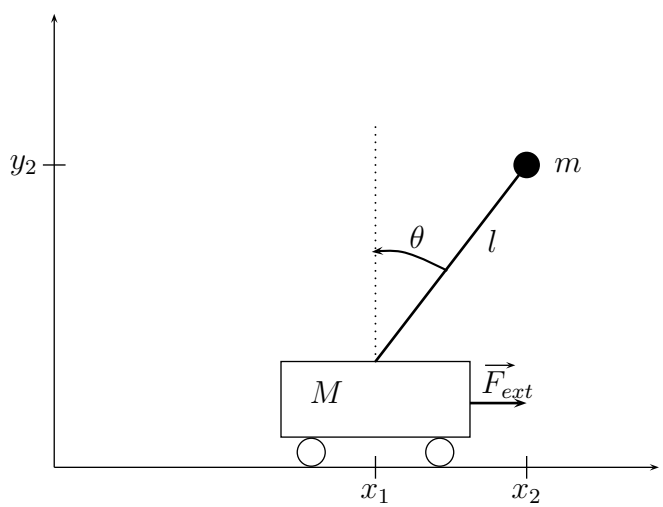

FIGURE 2.2 – an inverted pendulum

The kinetic energy and potential energy are given by

$$E_k = \frac{1}{2}M\dot{x}_1^2 + \frac{1}{2}m(\dot{x}_2^2 + \dot{y}_2^2) \quad and \quad E_p = mglcos\theta.$$

Moreover, we have $y_2 = lcos\theta$ *and* $x_2 = x_1 + lsin\theta$. *So the Lagrangian of the system is*

$$L = E_k - Ep = \frac{1}{2}(M+m)\dot{x}_1^2 + ml\dot{x}_1^2\dot{\theta}cos\theta + \frac{1}{2}ml^2\dot{\theta}^2 - mglcos\theta.$$

According to the Euler-Lagrange equations $(x = (x_1, \theta))$,

$$\frac{d}{dt}\frac{\partial L}{\partial \dot{x}} = \frac{\partial L}{\partial x} + F_{ext}.$$

Assume that $F_{ext} = (u, 0)$, *we obtain*

$$\begin{cases} (M+m)\ddot{x}_1 + ml\ddot{\theta}cos\theta - ml\dot{\theta}^2 sin\theta = u, \\ ml\ddot{x}_1 cos\theta + ml^2\ddot{\theta} - mglsin\theta = 0, \end{cases}$$

which gives that

$$\begin{cases} \ddot{x}_1 = \frac{ml\dot{\theta}^2 sin\theta - mgcos\theta sin\theta + u}{M + msin^2\theta}, \\ \ddot{\theta} = \frac{-ml\dot{\theta}^2 sin\theta cos\theta + (M+m)gsin\theta - ucos\theta}{l(M + msin^2\theta)}. \end{cases} \tag{2.5}$$

Let $X = (x_1, \dot{x}_1, \theta, \dot{\theta})$ *be the state of the system, we obtain a control system of the form*

$$\dot{X} = f(X, u),$$

where

$$f(X,u) = \Big(\dot{x}_1, \frac{ml\dot{\theta}^2 sin\theta - mgcos\theta sin\theta + u}{M + msin^2\theta}, \dot{\theta}, \frac{-ml\dot{\theta}^2 sin\theta cos\theta + (M+m)gsin\theta - ucos\theta}{l(M + msin^2\theta)}\Big).$$

Fix $\bar{x}_1 > 0$, *notice that* $(X_e, u_e) := \Big((\bar{x}_1, 0, 0, 0), 0\Big)$ *is an equilibrium of the control system* $\dot{X} = f(X, u)$. *The linearised control system at the equilibrium* (X_e, u_e) *can be written as*

$$\dot{X} = AX + Bu,$$

with

$$A = \begin{pmatrix} 0 & 1 & 0 & 0 \\ 0 & 0 & -\frac{mg}{M} & 0 \\ 0 & 0 & 0 & 1 \\ 0 & 0 & \frac{(M+m)g}{Ml} & 0 \end{pmatrix} \quad and \quad B = \begin{pmatrix} 0 \\ \frac{1}{M} \\ 0 \\ -\frac{1}{Ml} \end{pmatrix}.$$

The Kalman matrix (B, AB, A^2B, A^3B) *equals*

$$\begin{pmatrix} 0 & \frac{1}{M} & 0 & \frac{mg}{M^2 l} \\ \frac{1}{M} & 0 & \frac{mg}{M^2 l} & 0 \\ 0 & -\frac{1}{Ml} & 0 & -\frac{(M+m)g}{M^2 l^2} \\ -\frac{1}{Ml} & 0 & -\frac{(M+m)g}{M^2 l^2} & 0 \end{pmatrix}.$$

Its determinant equals

$$\frac{g^2}{M^4 l^4} \neq 0.$$

In conclusion, the inverted pendulum is small-time locally controllable at (X_e, u_e).

Let us now define the strong jet accessibility subspace of a control system at an equilibrium point.

Definition 2.4.6 *The strong jet accessibility subspace of the control system* $\dot{x} = f(x, u)$ *at an equilibrium* (x_e, u_e) *is the linear subspace of* $\mathbb{R}^n$*, denoted by* $\mathbb{A}(x_e, u_e)$*, defined by*

$$\mathbb{A}(x_e, u_e) := \left\{ g(x_e);\, g \in Lie\Big(\frac{\partial^{|\alpha|} f}{\partial u^\alpha}(\cdot, u_e),\, \alpha \in \mathbb{N}^m\Big) \right\}.$$

In the case of a driftless affine control system, we obtain a local version of the Chow-Rashevsky Theorem (see [16]).

Theorem 2.4.7 *Let us assume that* Ω *is a nonempty open subset of* $\mathbb{R}^n$*, that* $\Omega \times 0\} \subset \mathcal{O}$ *and that, for some* $f_1, ..., f_m \in C^\infty(\Omega; \mathbb{R}^n)$*,*

$$f(x, u) = \sum_{i=1}^{m} u_i f_i(x), \qquad \forall (x, u) \in \mathcal{O}$$

Let $x_e \in \Omega$ *be such that*

$$\mathbb{A}(x_e, 0) := \Big\{ g(x_e); g \in Lie\,\{f_1, ..., f_m\} \Big\} = \mathbb{R}^n.$$

Then the control system $\dot{x} = f(x, u)$ *is small-time locally controllable at* $(x_e, 0) \in \mathcal{O}$.

The following theorem provides necessary conditions of small-time local controllability around an equilibrium point.

Theorem 2.4.8 *(see [16]) Assume that the control system* $\dot{x} = f(x, u)$ *is small-time locally controllable at the equilibrium point* (x_e, u_e) *and that* f *is analytic. Then the control system* $\dot{x} = f(x, u)$ *satisfies* $\mathbb{A}(x_e, u_e) = \mathbb{R}^n$.

The remaining of this chapter is devoted to the study of local controllability around a reference control at fixed time.

2.5 Local controllability around a reference control

Our aim here is to provide sufficient conditions for first and second order local controllability result.

2.5.1 The End-Point Mapping

Let us consider a nonlinear control system on $\mathbb{R}^n$ (with $n, m \geq 1$), of the form

$$\dot{\gamma}(t) = X^0(\gamma(t)) + \sum_{i=1}^{m} u_i(t) X^i(\gamma(t)), \quad \text{for a.e.} \quad t, \tag{2.6}$$

where the state $\gamma(t)$ belongs to $\mathbb{R}^n$, the control $u(t)$ to $\mathbb{R}^m$, and the functions $X^0, X^1, ..., X^m$ are smooth functions on $\mathbb{R}^n$. Given $\bar{\gamma} \in \mathbb{R}^n$ and $\bar{u} \in L^2([0,T];\mathbb{R}^m)$ $(T > 0)$, the Cauchy problem

$$\begin{cases} \dot{\gamma}(t) = X^0(\gamma(t)) + \sum_{i=1}^{m} \bar{u}_i(t) X^i(\gamma(t)) \quad \text{for a.e.} \quad t \in [0,T], \\ \gamma(0) = \bar{\gamma}, \end{cases}$$

possesses a unique solution $\gamma_{\bar{\gamma},\bar{u}}(\cdot)$ that we suppose to be defined on $[0,T]$. The End-Point mapping associated with $\bar{\gamma}$ in time T is defined as

$$\begin{array}{rcl} E^{\gamma,T} \,:\, L^2\big([0,T];\mathbb{R}^m\big) & \longrightarrow & \mathbb{R}^n \\ u & \longmapsto & \gamma_{\bar{\gamma},u}(T). \end{array}$$

We are interested in local controllability properties of (2.6) around $\bar{u}$. The control system (2.6) is called *controllable around* $\bar{u}$ in (in time T) if for every final state $\gamma \in \mathbb{R}^n$ close to $\gamma_{\bar{\gamma},u}(T)$ there is a control $u \in L^2\big([0,T];\mathbb{R}^m\big)$ which steers $\bar{\gamma}$ to γ, that is such that $E^{\bar{\gamma},T}(u) = \gamma$. Such a property is satisfied as soon as $E^{\bar{\gamma},T}$ is locally open at $\bar{u}$. Our aim in the next sections is to give an estimate from above on the size of $\|u\|_{L^2}$ in terms of $\|\gamma - \gamma_{\bar{\gamma},\bar{u}}(T)\|$.

2.5.2 First-order controllability results

The End-Point mapping is a smooth mapping. Given $\bar{\gamma} \in \mathbb{R}^n$, $\bar{u} \in L^2\big([0,T];\mathbb{R}^m\big)$, and setting $\bar{\gamma}(\cdot) := \gamma_{\bar{\gamma},\bar{u}}(\cdot)$, the differential of $E^{\bar{\gamma},T}$ at $\bar{u}$ is given by the linear operator

$$\begin{array}{rcl} D_{\bar{u}}E^{\bar{\gamma},T} \,:\, L^2\big([0,T];\mathbb{R}^m\big) & \longrightarrow & \mathbb{R}^m \\ v & \longmapsto & \phi(T), \end{array}$$

where $\phi(\cdot)$ is the unique solution to the Cauchy problem

$$\begin{cases} \dot{\phi}(t) = A(t)\phi(t) + B(t)v(t) \quad \text{for a.e.} \quad t \in [0,T], \\ \phi(0) = 0, \end{cases} \tag{2.7}$$

where the matrices $A(t) \in M_n(\mathbb{R})$ and $B(t) \in M_{n,m}(\mathbb{R})$ are defined by

$$A(t) := dX^0(\bar{\gamma}(t)) + \sum_{i=1}^{m} \bar{u}_i(t) dX^i(\bar{\gamma}(t))$$

and

$$B(t) := \Big(X^1(\bar{\gamma}(t)), ..., X^m(\bar{\gamma}(t)) \Big),$$

where $\bar{\gamma}(t) = \gamma_{\bar{\gamma},\bar{u}}(t)$ for a.e. $t \in [0,T]$.
Note that if we denote by $S(\cdot)$ the solution to the Cauchy problem

$$\begin{cases} \dot{S}(t) = A(t)S(t), \\ S(0) = I_n, \end{cases} \tag{2.8}$$

then there holds

$$D_{\bar{u}} E^{\bar{\gamma},T}(v) = \sum_{i=1}^{m} S(T) \int_0^T v_i(t) S(t)^{-1} X^i(\bar{\gamma}(t))\, dt, \tag{2.9}$$

for every $v \in L^2([0,T];\mathbb{R}^m)$.
We say that the control system (2.6) is *controllable at first order around* $\bar{u}$ if the mapping $E^{\bar{\gamma},T} : L^2\big([0,T];\mathbb{R}^m\big) \to \mathbb{R}^n$ is a *submersion* at $\bar{u}$, that is if the linear operator

$$D_{\bar{u}} E^{\bar{\gamma},T} \,:\, L^2\big([0,T];\mathbb{R}^m\big) \longrightarrow \mathbb{R}^n,$$

is surjective.
Let us introduce the definition of the linearised control system along a trajectory.

Definition 2.5.1 *The linearised control system along the trajectory* $(\bar{\gamma},\bar{u}) : [0,T] \to \mathbb{R}^n \times \mathbb{R}^m$ *is the linear time-varying control system*

$$\dot{\phi}(t) = A(t)\phi(t) + B(t)v(t) \quad \textit{for a.e.} \quad t \in [0,T], \tag{2.10}$$

where, at time t*, the state is* $\phi(t) \in \mathbb{R}^n$ *and the control is* $v(t) \in \mathbb{R}^m$*.*

The following theorem describes a first order controllability result.

Theorem 2.5.2 *Let us assume that the linearised control system along the trajectory $(\bar{\gamma}, \bar{u})$ is controllable. Then, the control system 2.6 is controllable at first order around $\bar{u}$. Moreover, for every $\bar{\gamma} \in \mathbb{R}^n$ and $T > 0$, there are $\mu, \nu > 0$, n smooth controls $u^1, \cdots, u^n : [0,T] \to \mathbb{R}^m$ with $Supp(u^j) \subset (0,T)$ for $j = 1, ..., n$ and a smooth mapping*

$$U = (U_1, \cdots, U_n) : B\Big(\bar{\gamma}(T), \mu\Big) \longrightarrow B(0, \nu)$$

with $U\Big(\bar{\gamma}(T)\Big) = 0$ such that for every $\gamma \in B\Big(\bar{\gamma}(T), \mu\Big)$,

$$E^{\bar{\gamma},T}\left(\sum_{j=1}^{n} U_j(\gamma) u^j\right) = \gamma.$$

Proof of Theorem 2.5.2 : From the definition of the controllability of the linearised control system along the trajectory $(\bar{\gamma}, \bar{u})$ we deduce that the map $E^{\bar{\gamma},T} : L^2\big([0,T]; \mathbb{R}^m\big) \to \mathbb{R}^n$ is a smooth submersion at $\bar{u} \equiv 0$. Thus, remembering that the set of controls $u \in C^\infty([0,T], \mathbb{R}^m)$ with $supp(u) \subset (0,T)$ is dense in $L^2([0,T], \mathbb{R}^m)$, there are n smooth controls $u^1, ..., u^n : [0,T] \to \mathbb{R}^k$ with $Supp(u^j) \subset (0,T)$ for $j = 1, ..., n$ such that

$$Span\left\{DE^{\bar{\gamma},T}(\bar{u})(u^j) \,|\, j = 1, ..., n\right\} = \mathbb{R}^n. \tag{2.11}$$

Define $F : \mathbb{R}^n \to \mathbb{R}^n$ by

$$F(\lambda) := E^{\bar{\gamma},T}\Big(\bar{u} + \sum_{j=1}^{n} \lambda_j u^j\Big) \qquad \forall \lambda = (\lambda_1, ..., \lambda_n) \in \mathbb{R}^n.$$

The function F is well-defined, smooth, and satisfies $F(0) = E^{\bar{\gamma},T}(\bar{u}) = \bar{\gamma}(T)$. Its differential at $\lambda = 0$ is given by

$$DF(0)(\lambda) = \sum_{j=1}^{n} \lambda_j DE^{\bar{\gamma},T}(\bar{u})(u^j) \quad \forall \lambda \in \mathbb{R}^n,$$

hence it is invertible By (3.10). By the Inverse Function Theorem, we conclude the proof. □

The result below follows easily from the previous theorem.

Proposition 2.5.3 *Assume that assumptions of Theorem 2.5.2 hold. Then there are $\mu, C > 0$ such that for every $\gamma \in \mathbb{R}^n$ with $\|\gamma - \bar{\gamma}(T)\| < \mu$, there is a C^∞ function $u : [0,T] \longrightarrow \mathbb{R}^m$ such that*

$$Supp(u) \subset (0,T), \quad \|u\|_{C^k} < C\,\|\gamma - \bar{\gamma}(T)\|$$

and

$$\gamma_{\bar{\gamma},u}(T) = \gamma.$$

Let us now provide an example of first order controllable control system.

Example 2.5.4 *Let us consider a nonlinear control system on $\mathbb{R}^2$, of the form*

$$\dot{\gamma}(t) = X^0(\gamma(t)) + u(t)X^1(\gamma(t)), \quad \textit{for a.e.} \quad t, \tag{2.12}$$

where the state $\gamma(t) := \Big(x(t), y(t)\Big)$ belongs to $\mathbb{R}^2$, the control $u(t)$ to $\mathbb{R}$, and the functions X^0 and X^1 are two smooth functions on $\mathbb{R}^2$ given by

$$X^0(x,y) := (y, -x) \quad \textit{and} \quad X^1(x,y) := (0, x).$$

Given $\bar{\gamma} := (1,0) \in \mathbb{R}^2$ and $\bar{u} \equiv 0$, the Cauchy problem

$$\begin{cases} \dot{\gamma}(t) = X^0(\gamma(t)) \quad \textit{for a.e.} \quad t \in [0,1], \\ \gamma(0) = \bar{\gamma}, \end{cases}$$

possesses the unique solution $\gamma_{\bar{\gamma},\bar{u}}(t) := (cost, -sint)$. The linearised control system along the trajectory $(\bar{\gamma}, \bar{u}) : [0,1] \to \mathbb{R}^2 \times \mathbb{R}$ is the linear time-varying control system

$$\dot{\phi}(t) = A(t)\phi(t) + B(t)v(t) \quad \textit{for a.e.} \quad t \in [0,1], \tag{2.13}$$

where

$$A(t) := \begin{pmatrix} 0 & 1 \\ -1 & 0 \end{pmatrix} \quad \textit{and} \quad B(t) := \begin{pmatrix} 0 \\ cost \end{pmatrix}.$$

An easy computation yields

$$B_0(t) := B(t) = \begin{pmatrix} 0 \\ cost \end{pmatrix} \quad \textit{and} \quad B_1(t) := \dot{B}_0(t) - A(t)B_0(t) = \begin{pmatrix} -cost \\ -sint \end{pmatrix}.$$

It is clear that

$$Span\,\{B_i(0)u;\, u \in \mathbb{R},\, i = 0,1\} = \mathbb{R}^2.$$

Then by Theorem 2.3.4, the linearised control system (2.13) is controllable on $[0,1]$. Therefore the control system (2.12) is controllable at first order around $\bar{u} \equiv 0$.

2.5.3 Some sufficient condition for local openness

Here we are interested in the study of mappings $F : \mathcal{U} \to \mathbb{R}^N$ of class C^2 in an open set $\mathcal{U}$ in some Banach space X. We call critical point of F any $u \in \mathcal{U}$ such that $D_uF : \mathcal{U} \to \mathbb{R}^N$ is not surjective. We call corank of u, the quantity

$$\text{corank}(u) := N - \dim\Big(\text{Im}\big(D_uF\big)\Big).$$

If $Q : \mathcal{U} \to \mathbb{R}$ is a quadratic form, its negative index is defined by

$$\mathrm{ind}_-(Q) := \max\Big\{\dim(L) \mid Q_{|L\setminus\{0\}} < 0\Big\}.$$

The following non-quantitative result provides a sufficient condition at second order for local openness. For sake of completness, we provide its proof (see [61]).

Theorem 2.5.5 *Let $F : \mathcal{U} \to \mathbb{R}^N$ be a mapping of class C^2 on an open set $\mathcal{U} \subset X$ and $\bar{u} \in \mathcal{U}$ be a critical point of F of corank r. If*

$$ind_-\left(\lambda^*\left(D^2_{\bar{u}}F\right)_{|Ker(D_{\bar{u}}F)}\right) \geq r \qquad \forall \lambda \in \big(Im\big(D_{\bar{u}}F\big)\big)^{\perp} \setminus \{0\}, \tag{2.14}$$

then the mapping F is locally open at $\bar{u}$, that is the image of any neighborhood of $\bar{u}$ is a neighborhood of $F(\bar{u})$.

Proof of Theorem 4.2.5 : We need two preliminary lemmas.

Lemma 2.5.6 *Let $G : \mathbb{R}^k \to \mathbb{R}^l$ be a mapping of class C^2 with $G(0) = 0$. Assume that there is*

$$\bar{v} \in Ker(D_0G) \quad with \quad D^2_0G \cdot \big(\bar{v}, \bar{v}\big) \in Im\big(D_0G\big), \tag{2.15}$$

such that the linear mapping

$$w \in Ker(D_0G) \longmapsto Proj_{\mathcal{K}}\left[D^2_0G \cdot \big(\bar{v}, w\big)\right] \in \mathcal{K} \tag{2.16}$$

is surjective, where $\mathcal{K} := Im(D_0G)^{\perp}$ and $Proj_{\mathcal{K}} : \mathbb{R}^l \to \mathcal{K}$ denotes the orthogonal projection onto $\mathcal{K}$. Then there is a sequence $\{u_i\}_i$ converging to 0 in $\mathbb{R}^k$ such that $G(u_i) = 0$ and $D_{u_i}G$ is surjective for any i.

Proof of lemma 2.15 : Let E a vector space in $\mathbb{R}^k$ such that $\mathbb{R}^k = E \oplus \mathrm{Ker}(D_0G)$. Since $D^2_0G \cdot \big(\bar{v}, \bar{v}\big)$ belongs to $\mathrm{Im}\big(D_0G\big)$ there is $\hat{v} \in E$ such that

$$D_0G\big(\hat{v}\big) = -\frac{1}{2}D^2_0G \cdot \big(\bar{v}, \bar{v}\big).$$

Define the family of mappings $\{\Phi_\epsilon\}_{\epsilon>0} : E \times \mathrm{Ker}(D_0G) \to \mathbb{R}^l$ by

$$\Phi_\epsilon(z,t) := \frac{1}{\epsilon^5}G\left(\epsilon^2\bar{v} + \epsilon^3 t + \epsilon^4\hat{v} + \epsilon^5 z\right) \qquad \forall (z,t) \in E \times \mathrm{Ker}(D_0G),\ \forall \epsilon > 0.$$

For every $\epsilon > 0$, Φ_ϵ is of class C^2 on $E \times \mathrm{Ker}(D_0G) \to \mathbb{R}^l$ and its derivative at $(z,t) = (0,0)$ is given by

$$D_{(0,0)}\Phi_\epsilon(Z,T) = D_{\epsilon^2\bar{v}+\epsilon^4\hat{v}}G(Z) + \frac{1}{\epsilon^2}D_{\epsilon^2\bar{v}+\epsilon^4\hat{v}}G(T),$$

for any $(Z,T) \in E \times \mathrm{Ker}(D_0G)$. For every $(Z,T) \in E \times \mathrm{Ker}(D_0G)$, the first term of the right-hand side $D_{\epsilon^2\bar{v}+\epsilon^4\hat{v}}G(Z)$ tends to $D_0G(Z)$ as ϵ tends to 0 and since

$$\begin{aligned}\frac{1}{\epsilon^2}D_{\epsilon^2\bar{v}+\epsilon^4\hat{v}}G(T) &= \frac{1}{\epsilon^2}\Big[D_0G(T) + D_0^2G\cdot\big(\epsilon^2\bar{v}+\epsilon^4\hat{v},T\big) + \big|\epsilon^2\bar{v}+\epsilon^4\hat{v}\big|\,o(1)\Big] \\ &= \frac{1}{\epsilon^2}\Big[D_0^2G\cdot\big(\epsilon^2\bar{v}+\epsilon^4\hat{v},T\big) + \big|\epsilon^2\bar{v}+\epsilon^4\hat{v}\big|\,o(1)\Big],\end{aligned}$$

the second term tends to $D_0^2G(\bar{v},T)$ as ϵ tends to 0. By (2.16), the linear mapping

$$(Z,T) \in E \times \mathrm{Ker}(D_0G) \longmapsto D_0G(Z) + D_0^2G\cdot\big(\bar{v},T\big) \in \mathbb{R}^l$$

is surjective. Then there is $\bar{\epsilon} > 0$ such that $D_0\Phi_\epsilon$ is surjective for all $\epsilon \in (0,\bar{\epsilon})$. Therefore for every $\epsilon \in (0,\bar{\epsilon})$ the set

$$\Big\{(z,t) \in E \times \mathrm{Ker}(D_0G)\,|\,\hat{\Phi}_\epsilon(z,t) = 0\Big\}$$

is a submanifold of class C^2 of dimension $k-l>0$ which contains the origin. Then there is a sequence $\{(z_i,t_i)\}_i$ converging to the origin such that $\Psi_{1/i}(z_i,t_i) = 0$ and $D_{(z_i,t_i)}\Psi_{1/i}$ is surjective for all i large enough. Thus setting

$$u_i := \frac{1}{i^2}\bar{v} + \frac{1}{i^3}t_i + \frac{1}{i^4}\hat{v} + \frac{{z_i}^5}{i} \qquad \forall i,$$

we get $G(u_i) = 0$ and $D_{u_i}G$ surjective for all i large enough. This proves the lemma. □

Lemma 2.5.7 *Let $Q : \mathbb{R}^k \to \mathbb{R}^m$ be a quadratic mapping such that*

$$ind_-\,(\lambda^*Q) \geq m, \quad \forall\lambda \in (\mathbb{R}^m)\setminus\{0\}. \tag{2.17}$$

Then the mapping Q has a regular zero, that is there is $v \in \mathbb{R}^k$ such that $Q(v) = 0$ and D_vQ is surjective.

Proof of lemma 2.5.7 : Since Q is a quadratic mapping, there is a symmetric bilinear map $B : \mathbb{R}^k \times \mathbb{R}^k \to \mathbb{R}^m$ such that

$$Q(v) = B(v,v) \qquad \forall v \in \mathbb{R}^k.$$

The kernel of Q, denoted by $\mathrm{Ker}(Q)$ is the set of $v \in \mathbb{R}^k$ such that

$$B(v,w) = 0 \qquad \forall w \in \mathbb{R}^k.$$

It is a vector subpace of $\mathbb{R}^k$. Up to considering the restriction of Q to a vector space E satisfying $E \oplus \mathrm{Ker}(Q) = \mathbb{R}^k$, we may assume that $\mathrm{Ker}(Q) = 0$. We now prove the result by induction on m.
In the case $m = 1$, we need to prove that there is $v \in \mathbb{R}^k$ with $Q(v) = 0$ and $D_vQ \neq 0$. By (2.17), we know that $\mathrm{ind}_-(Q) \geq 1$ and $\mathrm{ind}_-(-Q) \geq 1$, which means that there are two vector lines L^+, L^- in $\mathbb{R}^k$ such that $Q_{|L^+\setminus\{0\}} < 0$ and $Q_{|L^-\setminus\{0\}} > 0$. Then the restriction of Q to $L^+ \oplus L^-$ is a quadratic form which is sign-indefinite. Such a form has regular zeros.
Let us now prove the statement of the lemma for a fixed $m > 1$ under the assumption that it has been proven for all values less than m. So we consider a quadratic mapping $Q : \mathbb{R}^k \to \mathbb{R}^m$ satisfying (2.17) and such that $\mathrm{Ker}(Q) = \{0\}$. We distinguish two cases :
First case : $Q^{-1}(0) \neq \{0\}$.
Take any $v \neq 0$ such that $Q(v) = 0$. If v is a regular point, then the statement of the lemma follows. Thus we assume that v is a critical point of Q. Since $D_vQ(w) = 2B(v, w)$ for all $w \in \mathbb{R}^k$ and $\mathrm{Ker}(Q) = \{0\}$, the derivative $D_vQ : \mathbb{R}^k \to \mathbb{R}^m$ cannot be zero. Then its kernel $E = \mathrm{Ker}(D_vQ)$ has dimension $k-r$ with $r := \mathrm{rank}(D_vQ) \in [1, m-1]$. Set $F := \mathrm{Im}(D_vQ)^\perp$ and define the quadratic form

$$\tilde{Q} \,:\, E \simeq \mathbb{R}^{k-r} \longrightarrow F \simeq \mathbb{R}^{m-r}$$

by

$$\tilde{Q}(w) := \mathrm{Proj}_F\big(Q(w)\big) \qquad \forall w \in E,$$

where $\mathrm{Proj}_F : \mathbb{R}^m \to F$ denotes the orthogonal projection to F. We have for every $\lambda \in F$ and every $w \in E$,

$$\lambda^*\tilde{Q}(w) = \lambda^*Q(w).$$

We claim that $\mathrm{ind}_-(\lambda^*Q) \geq m - r$, for every $\lambda \in F \setminus \{0\}$. As a matter of fact, by assumption, for every $\lambda \in F\setminus\{0\}$ there is a vector space L of dimension m such that $(\lambda^*Q)_{|L\setminus\{0\}} < 0$. The space $L \cap E$ has dimension at least $m - k$ as the intersection of L of dimension m and E of dimension $k - r$ in $\mathbb{R}^k$. By induction, we infer that $\tilde{Q}$ has a regular zero $\tilde{w} \in E = \mathrm{Ker}(D_vQ)$, that is $Q(\tilde{w}) \in \mathrm{Im}(D_vQ)$ and

$$w \in E = \mathrm{Ker}(D_vQ) \longmapsto \mathrm{Proj}_F\left(B\big((\tilde{w}, w\big)\right) \in F$$

is surjective. Define $F : \mathbb{R}^k \to \mathbb{R}^m$ by

$$F(u) := Q\big(v + u\big) \qquad \forall u \in \mathbb{R}^k.$$

The function F is of class C^2 verifies $D_0F = D_vQ, D_0^2F = B$ and the assumptions of Lemma 2.5.6 are satisfied with $\bar{v} = \tilde{w}$. We deduce that Q has a regular zero as well.
Second case : $Q^{-1}(0) = \{0\}$.

In fact, we are going to prove that this case cannot appear. First we claim that Q is surjective. Since Q is homogeneous ($Q(rv) = r^2 Q(v)$ for all $v \in \mathbb{R}^k$ and $r \in \mathbb{R}$), we have

$$Q(\mathbb{R}^k) = \Big\{ rQ(v) \,|\, r \geq 0, v \in \mathbb{S}^{k-1} \Big\}.$$

The set $Q(\mathbb{S}^{k-1})$ is compact, hence $Q(\mathbb{R}^k)$ is closed. Assume that $Q(\mathbb{R}^k) \neq \mathbb{R}^m$ and take $x = Q(v)$ on the boundary of $Q(\mathbb{R}^k)$. Then x is necessarily a critical point for Q. Proceeding as in the first case, we infer that $x = Q(w)$ for some non-critical point. This gives a contradiction. Then we have $Q(\mathbb{R}^k) = \mathbb{R}^m$. Consequently the mapping

$$\begin{array}{rcl} \mathcal{Q} := \frac{Q}{|Q|} \,:\, \mathbb{S}^{k-1} & \longrightarrow & \mathbb{S}^{m-1} \\ v & \longmapsto & \frac{Q(v)}{|Q(v)|} \end{array}$$

is surjective. By Sard's Theorem (see [24]), it has a regular value x, that is $x \in \mathbb{S}^{m-1}$ such that $D_v\mathcal{Q}$ is surjective for all $v \in \mathbb{S}^{k-1}$ satisfying $\mathcal{Q}(v) = x$ for all $v \in \mathbb{S}^{k-1}$. Among the set of $v \in \mathbb{S}^{k-1}$ such that $\mathcal{Q}(v) = x$ take $\bar{v}$ for which $|Q(v)|$ is minimal, that is such that

$$Q(\bar{v}) = \bar{a}x$$

and

$$\forall a > 0, \forall v \in \mathbb{S}^{k-1}, \quad Q(v) = ax \Longrightarrow a \geq \bar{a}.$$

In other terms, if we define the smooth function $\Psi : (0, +\infty) \times \mathbb{S}^{k-1} \to \mathbb{R}^m$ as,

$$\Psi(a, v) := Q(v) - ax, \qquad \forall a > 0,\, \forall v \in \mathbb{S}^{k-1},$$

then the pair $(\bar{a}, \bar{v})$ satisfies

$$\bar{a} \leq a \quad \text{for every} \quad (a, v) \in (0, +\infty) \times \mathbb{S}^{k-1} \quad \text{with } \Psi(a, v) = 0.$$

By the Lagrange Multiplier Theorem, there is $\lambda_0 \in \mathbb{R}$ and $\lambda \in \mathbb{R}^m$ with $(\lambda_0, \lambda) \neq (0, 0)$ such that

$$\lambda^* D_{\bar{v}} Q = 0 \quad \text{and} \quad -\lambda^* x = \lambda_0.$$

Note that we have for every $h \in T_{\bar{v}}\mathbb{S}^{k-1} \subset \mathbb{R}^k$, we have

$$\begin{aligned} D_{\bar{v}}\mathcal{Q}(h) &= \frac{1}{\big|Q(\bar{v})\big|} D_{\bar{v}}Q(h) + [D_{\bar{v}}|Q|(h)]\; Q\big(\bar{v}\big) \\ &= \frac{1}{\bar{a}} D_{\bar{v}}Q(h) + \bar{a}\,[D_{\bar{v}}|Q|(h)]\; x. \end{aligned} \tag{2.18}$$

Consequently, if $\lambda_0 = 0$ (that is if $(\bar{a}, \bar{v})$ is a critical point of ψ), then $\lambda^* D_{\bar{v}}\mathcal{Q} = 0$ which contradicts the fact $D_{\bar{v}}\mathcal{Q}$ is surjective (because λ cannot be collinear with

x by 2-homogeneity of Q). In conclusion, we can assume without loss of generality that $\lambda_0 = -1$. Since $(\bar{a}, \bar{v})$ is not a critical point of ψ, the set

$$\mathcal{C} = \Big\{(a, v) \in (0, +\infty) \times \mathbb{S}^{k-1} \mid \Psi(a, v) = 0\Big\}$$

is a smooth submanifold of $(0, +\infty) \times \mathbb{S}^{k-1}$ of dimension $k - m$ in a neighborhood of $\big(\bar{a}, \bar{v}\big)$. Then for every $(h_a, h_v) \in \mathrm{Ker}(D_{\bar{a},\bar{v}}\Psi)$, which is equivalent to $h_a = 0$ and $D_{\bar{v}}Q(h_v) = 0$ with $h_v \in T_{\bar{v}}\mathbb{S}^{k-1}$, there is a smooth curve $\gamma = (\gamma_a, \gamma_v) : (-\epsilon, \epsilon) \to \mathcal{C}$ such that $\gamma(0) = (\bar{a}, \bar{v})$ and $\dot{\gamma}(0) = (h_a, h_v)$. Then differentiating two times the equality $\Psi(\gamma(t)) = 0$ and using that $\frac{\partial^2\Psi}{\partial a^2} = 0$ and $\lambda^* \frac{\partial\Psi}{\partial v}(\bar{a}, \bar{v}) = \lambda^* D_{\bar{v}}Q = 0$, we get

$$\lambda^* \frac{\partial^2\Psi}{\partial v^2}\big(\bar{a}, \bar{v}\big) = \lambda^* \ddot{\gamma}(0) \frac{\partial\Psi}{\partial a}\big(\bar{a}, \bar{v}\big) = \ddot{\gamma}(0)\lambda^* x = \ddot{\gamma}(0).$$

Note that $\frac{\partial^2\Psi}{\partial v^2} = Q$. Furthermore, since $(\bar{a}, \bar{v})$ is solution to our minimization problem with constraine, we have $\gamma_a(t) \geq \bar{a} = \gamma_a(0)$ for all $t \in (-\epsilon, \epsilon)$. Then we have

$$\lambda^* Q(h) \geq 0 \qquad \forall h \in \mathrm{Ker}\big(D_{\bar{v}}Q\big) \cap T_{\bar{v}}\mathbb{S}^{k-1}.$$

Since $Q(\bar{v}) = \bar{a} > 0$ we have indeed

$$\lambda^* Q(h) \geq 0 \qquad \forall h \in \Big(\mathrm{Ker}\big(D_{\bar{v}}Q\big) \cap T_{\bar{v}}\mathbb{S}^{k-1}\Big) \oplus \mathbb{R}\bar{v} =: L. \tag{2.19}$$

Let us compute the dimension of the non-negative subspace L of the quadratic form $\lambda^* Q$. Since $D_{\bar{v}}\mathcal{Q}$ is surjective, we have

$$\dim\Big(\mathrm{Im}\big(D_{\bar{v}}\mathcal{Q}\big)\Big) = m - 1.$$

Which means (remember (2.18)) that $\mathrm{Im}\left(D_{\bar{v}}Q_{|\mathbb{S}^{k-1}}\right)$ has dimension m or $m-1$. But $\lambda^* D_{\bar{v}}Q = 0$ with $\lambda \neq 0$, thus we have necessarily

$$\dim\Big(\mathrm{Im}\big(D_{\bar{v}}Q_{|\mathbb{S}^{k-1}}\big)\Big) = m - 1$$

and

$$\begin{aligned}\dim\Big(\mathrm{Ker}\big(D_{\bar{v}}Q\big) \cap T_{\bar{v}}\mathbb{S}^{k-1}\Big) = \dim\Big(\mathrm{Ker}\big(D_{\bar{v}}Q_{|\mathbb{S}^{k-1}}\big)\Big) &= k - 1 - (m - 1) \\ &= k - m.\end{aligned}$$

Consequently, $\dim(L) = k - m + 1$, thus $\mathrm{ind}_-\left(\lambda^* Q\right)$ has to be $\leq m - 1$, which contradicts the hypothesis of the lemma. This shows that $Q^{-1}(0) = \{0\}$ is impossible and concludes the proof of the lemma. $\square$

We are ready to prove Theorem 4.2.5. Set

$$S := \Big\{\lambda \in \Big(\mathrm{Im}\big(D_{\bar{u}}F\big)\Big)^{\perp} \mid |\lambda| = 1\Big\} \subset \mathbb{R}^N.$$

By assumption (4.14), for every $\lambda \in S$, there is a subspace $E_\lambda \subset \mathrm{Ker}\,(D_{\bar u}F)$ of dimension r such that

$$\lambda^*\big(D^2_{\bar u}F\big)_{|E_\lambda\setminus\{0\}} < 0.$$

By continuity of the mapping $\nu \mapsto \nu^*\,(D^2_{\bar u}F)_{|E_\lambda}$, there is an open set $\mathcal{O}_\lambda \subset S$ such that

$$\nu^*\big(D^2_{\bar u}F\big)_{|E_\lambda\setminus\{0\}} < 0 \qquad \forall \nu \in \mathcal{O}_\lambda.$$

Choose a finite covering

$$S = \bigcup_{i=1}^{I} \mathcal{O}_{\lambda_i}$$

and a finite dimensional space $E \subset X$ such that

$$\mathrm{Im}\,\big(D_{\bar u}F_{|E}\big) = \mathrm{Im}\big(D_{\bar u}F\big).$$

Then the restriction $\tilde F$ of F to the finite dimensional subspace $E + \sum_{i=1}^{I} E_{\lambda_i} \subset X$ satisfies

$$\mathrm{ind}_-\left(\lambda^*\left(D^2_{\bar u}\tilde F\right)_{|\mathrm{Ker}(D_{\bar u}\tilde F)}\right) \geq r \qquad \forall \lambda \in \left(\mathrm{Im}\big(D_{\bar u}\tilde F\big)\right)^\perp \setminus \{0\},$$

with

$$r = \mathrm{corank}_F\big(\bar u\big) := N - \dim\big(\mathrm{Im}\big(D_{\bar u}F\big)\big) = N - \dim\left(\mathrm{Im}\big(D_{\bar u}\tilde F\big)\right).$$

Set $\mathcal{K} := \left(\mathrm{Im}\left(D_{\bar u}\tilde F\right)\right)^\perp$ and define the quadratic mapping $Q : \mathrm{Ker}(D_{\bar u}\tilde F) \to \mathcal{K}$ by

$$Q(v) := \mathrm{Proj}_{\mathcal{K}}\left[\left(D^2_{\bar u}\tilde F\right)\cdot(v,v)\right] \qquad \forall v \in \mathrm{Ker}\left(D_{\bar u}\tilde F\right),$$

where $\mathrm{Proj}_{\mathcal{K}} : \mathbb{R}^N \to \mathcal{K}$ denotes the orthogonal projection onto $\mathcal{K}$. The assumption (2.17) of Lemma 2.5.7 is satisfied. Then by Lemma 2.5.7, Q has a regular zero, that is $\bar v \in \mathrm{Ker}(D_{\bar u}\tilde F)$ such that

$$Q\big(\bar v\big) = 0 \quad \Longleftrightarrow \quad D^2_{\bar u}\tilde F\cdot\big(\bar v,\bar v\big) \in \mathcal{K} = \mathrm{Im}\left(D_{\bar u}\tilde F\right)$$

and

$$\begin{aligned} &D_{\bar v}Q \text{ surjective} \\ &\qquad \Longleftrightarrow \quad w \in \mathrm{Ker}\big(D_{\bar u}\tilde F\big) \;\mapsto\; \mathrm{Proj}_{\mathcal{K}}\left[D^2_{\bar u}\tilde F\cdot\big(\bar v, w\big)\right] \in \mathcal{K} \text{ surjective.} \end{aligned}$$

Setting $G(v) := \tilde{F}(\bar{u}+v) - \tilde{F}(\bar{u})$ and applying Lemma 2.5.6, we get a sequence $\{u_i\}_i$ converging to $\bar{u}$ such that $F(u_i) = F(\bar{u})$ and $D_{u_i}\tilde{F}$ is surjective for any i. By the Inverse Function Theorem, this implies that F is locally open at $\bar{u}$. $\square$

In the above statement, $(D^2_{\bar{u}}F)_{|\mathrm{Ker}(D_{\bar{u}}F)}$ refers to the quadratic mapping from $\mathrm{Ker}(D_{\bar{u}}F)$ to $\mathbb{R}^N$ defined by

$$\left(D^2_{\bar{u}}F\right)_{|\mathrm{Ker}(D_{\bar{u}}F)}(v) := D^2_{\bar{u}}F \cdot (v,v) \qquad \forall v \in \mathrm{Ker}(D_{\bar{u}}F).$$

The following result is a quantitative version of the previous theorem. (We denote by $B_X(\cdot,\cdot)$ the balls in X with respect to the norm $\|\cdot\|_X$.)

Theorem 2.5.8 *Let $F : \mathcal{U} \to \mathbb{R}^N$ be a mapping of class C^2 on an open set $\mathcal{U} \subset X$ and $\bar{u} \in \mathcal{U}$ be a critical point of F of corank r. Assume that (4.14) holds. Then there exist $\bar{\epsilon}, c \in (0,1)$ such that for every $\epsilon \in (0,\bar{\epsilon})$ the following property holds : For every $u \in \mathcal{U}, z \in \mathbb{R}^N$ with*

$$\|u - \bar{u}\|_X < \epsilon, \quad |z - F(u)| < c\,\epsilon^2, \tag{2.20}$$

there are $w_1, w_2 \in X$ such that $u + w_1 + w_2 \in \mathcal{U}$,

$$z = F\big(u + w_1 + w_2\big), \tag{2.21}$$

and

$$w_1 \in Ker\,(D_uF)\,, \quad \big\|w_1\big\|_X < \epsilon, \quad \big\|w_2\big\|_X < \epsilon^2. \tag{2.22}$$

Proof of Theorem 4.2.6 : Proceeding as in the proof of Theorem 4.2.5, we may assume that X is finite dimensional. We may also assume that $\bar{u} = 0$ and $F(\bar{u}) = 0$. As before, set $\mathcal{K} := (\mathrm{Im}\,(D_{\bar{u}}F))^{\perp}$ and define the quadratic mapping $Q : \mathrm{Ker}(D_0F) \to \mathcal{K}$ by

$$Q(v) := \mathrm{Proj}_{\mathcal{K}}\left[\left(D^2_0F\right) \cdot (v,v)\right] \qquad \forall v \in \mathrm{Ker}\,(D_0F)\,,$$

where $\mathrm{Proj}_{\mathcal{K}} : \mathbb{R}^N \to \mathcal{K}$ denotes the orthogonal projection onto $\mathcal{K}$. By (4.14) and Lemma 2.5.7, Q has a regular zero $\bar{v} \in \mathrm{Ker}(D_0F)$. Let E be a vector space in $\mathbb{R}^k$ such that $X = E \oplus \mathrm{Ker}(D_0F)$. Define $G : E \times \mathrm{Ker}(D_0F) \to \mathbb{R}^N$ by

$$G(z,t) := D_0F(z) + \frac{1}{2}\left(D^2_0F\right) \cdot (t,t) \qquad \forall (z,t) \in E \times \mathrm{Ker}(D_0F).$$

Then assumptions of Lemma 2.5.6 are satisfied and there is a sequence $\{(z_i,t_i)\}_i$ converging to 0 such that $G(z_i,t_i) = 0$ and $D_{(z_i,t_i)}G$ is surjective for all i.

Lemma 2.5.9 *There are $\mu, c > 0$ such that the image of any continuous mapping $\tilde{G} : B(0,1) \to \mathbb{R}^N$ with*

$$\sup\Big\{\Big|\tilde{G}(u) - G(u)\Big| \mid u = (z,t) \in B_X(0,1)\Big\} \leq \mu \tag{2.23}$$

contains the ball $\bar{B}(0,c)$.

Proof of lemma 2.5.9 : This is a consequence of the Brouwer Theorem which asserts that any continuous mapping from $\bar{B}(0,1) \subset \mathbb{R}^n$ into itself has a fixed point, see [7]. Let i large enough such that $u_i := (t_i, z_i)$ belongs to $B(0,1/4)$. Since $D_{u_i}G$ is surjective, there is a affine space V of dimension N which contains u_i and such that $D_{u_i}G_{|V}$ is invertible. Then by the Inverse Function Theorem, there is a open ball $\mathcal{B} = B_X(u_i, \rho) \cap V$ of u_i in V such that the mapping

$$G_{|V} \,:\, \mathcal{B} \longrightarrow G_{|V}(\mathcal{B}) \subset \mathbb{R}^N$$

is a smooth diffeomophism. We denote by $\mathcal{G} : G_{|V}(\mathcal{B}) \to \mathcal{B}$ its inverse. The set $G_{|V}(\mathcal{B})$ contains some closed ball $\bar{B}(0,c)$. Taking $c > 0$ sufficiently small we may assume that

$$\mathcal{G}(y) \in B_X\big(u_i, \rho/4\big) \qquad \forall y \in \bar{B}(0,c).$$

There is $\mu > 0$ such that any continuous mapping $\tilde{G} : B_X(0,1) \to \mathbb{R}^N$ verifying (2.23) satisfies

$$\tilde{G}(u) \in G_{|V}(\mathcal{B}) \qquad \forall u \in B_X(u_i, \rho/2) \cap V$$

and

$$\Big|\big(\mathcal{G} \circ \tilde{G}\big)(u) - u\Big| \leq \frac{\rho}{4} \qquad \forall u \in B_X(u_i, \rho/2) \cap V.$$

Let $\tilde{G} : B_X(0,1) \to \mathbb{R}^N$ be a continuous mapping verifying (2.23) and $y \in \bar{B}(0,c)$ be fixed. By the above construction, the function

$$\Psi : B_X(\mathcal{G}(y), \rho/4) \longrightarrow B_X(\mathcal{G}(y), \rho/4)$$

defined by

$$\Psi(u) := u - \big(\mathcal{G} \circ \tilde{G}\big)(u) + \mathcal{G}(y) \qquad \forall u \in B_X(\mathcal{G}(y), \rho/4),$$

is continuous from $B_X(\mathcal{G}(y), \rho/4)$ into itself. Thus by Brouwer's Theorem, it has a fixed point, that is there is $u \in B_X(\mathcal{G}(y), \rho/4)$ such that

$$\Psi(u) = u \quad \Longleftrightarrow \quad \tilde{G}(u) = y.$$

This concludes the proof of the lemma. $\square$

Define the family of mappings $\{\Phi_\epsilon\}_{\epsilon>0} : E \times \mathrm{Ker}(D_0F) \to \mathbb{R}^N$ by

$$\Phi_\epsilon(z,t) := \frac{1}{\epsilon^2} F\left(\epsilon^2 z + \epsilon t\right) \qquad \forall (z,t) \in E \times \mathrm{Ker}(D_0F),\ \forall \epsilon > 0.$$

By Taylor's formula at second order for F at 0, we have

$$\Phi_\epsilon(z,t) = G(z,t) + o(1),$$

as ϵ tends to 0. Then there is $\bar\epsilon > 0$ (with $|(\bar\epsilon^2, \bar\epsilon)| \le 1/2$) such that for every $\epsilon \in (0, \bar\epsilon)$,

$$|\Phi_\epsilon(z,t) - G(z,t)| \le \frac{\mu}{2} \qquad \forall (z,t) \in \big(E \times \mathrm{Ker}(D_0F)\big) \cap B(0,1).$$

By Lemma 2.5.9 applied to $\tilde G = \Phi_\epsilon$, we infer that $\bar B(0,c)$ is contained in $\Phi_\epsilon\big(B(0,1)\big)$, which in turn implies that for every $z \in \mathbb{R}^N$ such that $|z| = |z - F(\bar u)| < c\epsilon^2$, there are w_1, w_2 in X such that

$$z = w_1 + w_2, \quad w_1 \in \mathrm{Ker}(D_{\bar u}F), \quad \|w_1\|_X < \epsilon, \quad \|w_2\|_X < \epsilon^2.$$

Let us now show that the above result holds uniformly for u close to $\bar u = 0$. Since F is C^1, the vector space $\mathrm{Ker}(D_uF)$ is transverse to E for u close to $\bar u$. Moreover, again by C^1 regularity, for every $\delta > 0$, there is $\nu > 0$ such that for every $u \in B_X(\bar u, \nu)$,

$$\mathrm{Ker}(D_uF) \cap B(0,1) \subset \Big\{ y + z \in X \mid y \in \mathrm{Ker}(D_{\bar u}F) \cap B(0,1),\ \|z\|_X < \delta \Big\}.$$

Therefore, there is $\nu > 0$, such that for every $u \in B_X(\bar u, \nu)$, there is a vector space $W_u \subset X$ such that (W_u could be reduced to $\{0\}$)

$$X = E \oplus W_u \oplus \mathrm{Ker}\big(D_uF\big),$$

and there are linear mappings

$$\pi_1 : \mathrm{Ker}(D_0F) \to W_u, \quad \pi_2 : \mathrm{Ker}(D_0F) \to \mathrm{Ker}\big(D_uF\big)$$

such that for every $t \in \mathrm{Ker}(D_0F)$, we have

$$t = \pi_1(t) + \pi_2(t), \quad \big|\pi_1(t)\big|_X \le K|t|, \quad \big|\pi_1(t)\big|_X \le K|t|,$$

for some constant $K > 0$ (which depends on $\mathrm{Ker}(D_0F), E$, and $\|\cdot\|_X$). Given $u \in B_X(\bar u, \nu)$ and $\epsilon \in (0, \bar\epsilon)$ we define $\tilde G : \big(E \times \mathrm{Ker}(D_0F)\big) \cap B(0,1) \to \mathbb{R}^N$ by

$$\tilde G(z,t) := \frac{1}{\epsilon^2}\Big(F\big(u + \epsilon^2 z + \epsilon^2 \pi_1(t) + \epsilon \pi_2(t)\big) - F(u)\Big),$$

for every $(z,t) \in \big(E \times \mathrm{Ker}(D_0F)\big) \cap B(0,1)$. Taking ν and $\bar\epsilon > 0$ smaller if necessary, by Taylor's formula for F at u at second order, by the above construction and by the fact that D_uF and D_u^2F are respectively close to D_0F and D_0^2F, we may assume that (2.23) is satisfied. We conclude easily. □

We provide now a parametric version of the previous theorem.

Theorem 2.5.10 *Let $\theta \in \Theta$, Θ a compact set of parameter and let $F^\theta : \mathcal{U} \to \mathbb{R}^N$ be a mapping of class C^2 on an open set $\mathcal{U} \subset X$ such that the mapping $\theta \to F^\theta$ is continuous and $\bar{u} \in \mathcal{U}$ be a critical point of F^θ of corank r. Assume that (4.14) holds. Then there exist $\bar{\epsilon}, c \in (0,1)$ such that for every $\epsilon \in (0, \bar{\epsilon})$ the following property holds : For every $\theta \in \Theta, u \in \mathcal{U}, z \in \mathbb{R}^N$ with*

$$\|u - \bar{u}\|_X < \epsilon, \quad \left|z - F^\theta(u)\right| < c\,\epsilon^2, \tag{2.24}$$

there are $w_1, w_2 \in X$ such that $u + w_1 + w_2 \in \mathcal{U}$,

$$z = F^\theta\big(u + w_1 + w_2\big), \tag{2.25}$$

and

$$w_1 \in Ker\left(D_u F^\theta\right), \quad \left\|w_1\right\|_X < \epsilon, \quad \left\|w_2\right\|_X < \epsilon^2. \tag{2.26}$$

Proof of Theorem 2.5.10 : Fix $\bar{\theta} \in \Theta$. We may also assume that $\bar{u} = 0$ and $F^{\bar{\theta}}(\bar{u}) = 0$. As before, set $\mathcal{K} := \left(\mathrm{Im}\left(D_{\bar{u}} F^{\bar{\theta}}\right)\right)^\perp$ and define the quadratic mapping $Q^{\bar{\theta}} : \mathrm{Ker}(D_0 F^{\bar{\theta}}) \to \mathcal{K}$ by

$$Q^{\bar{\theta}}(v) := \mathrm{Proj}_{\mathcal{K}}\left[\left(D_0^2 F^{\bar{\theta}}\right) \cdot (v, v)\right] \qquad \forall v \in \mathrm{Ker}\left(D_0 F^{\bar{\theta}}\right),$$

where $\mathrm{Proj}_{\mathcal{K}} : \mathbb{R}^N \to \mathcal{K}$ denotes the orthogonal projection onto $\mathcal{K}$. By (4.14) and Lemma 2.5.7, $Q^{\bar{\theta}}$ has a regular zero $\bar{v} \in \mathrm{Ker}(D_0 F^{\bar{\theta}})$. Let E be a vector space in $\mathbb{R}^k$ such that $X = E \oplus \mathrm{Ker}(D_0 F^{\bar{\theta}})$. Define $G : E \times \mathrm{Ker}(D_0 F^{\bar{\theta}}) \to \mathbb{R}^N$ by

$$G^{\bar{\theta}}(z, t) := D_0 F^{\bar{\theta}}(z) + \frac{1}{2}\left(D_0^2 F^{\bar{\theta}}\right) \cdot (t, t) \qquad \forall (z, t) \in E \times \mathrm{Ker}(D_0 F^{\bar{\theta}}).$$

Then assumptions of Lemma 2.5.6 are satisfied and there is a sequence $\{(z_i^{\bar{\theta}}, t_i^{\bar{\theta}})\}_i$ converging to 0 such that $G(z_i^{\bar{\theta}}, t_i^{\bar{\theta}}) = 0$ and $D_{(z_i^{\bar{\theta}}, t_i^{\bar{\theta}})} G^{\bar{\theta}}$ is surjective for all i.
Define the family of mappings $\{\Phi_\epsilon^{\bar{\theta}}\}_{\epsilon > 0} : E \times \mathrm{Ker}(D_0 F^{\bar{\theta}}) \to \mathbb{R}^N$ by

$$\Phi_\epsilon^{\bar{\theta}}(z, t) := \frac{1}{\epsilon^2} F^{\bar{\theta}}\left(\epsilon^2 z + \epsilon t\right) \qquad \forall (z, t) \in E \times \mathrm{Ker}(D_0 F^{\bar{\theta}}),\ \forall \epsilon > 0.$$

By Taylor's formula at second order for $F^{\bar{\theta}}$ at 0, we have

$$\Phi_\epsilon^{\bar{\theta}}(z, t) = G^{\bar{\theta}}(z, t) + o(1),$$

as ϵ tends to 0. Then there is $\bar{\epsilon} > 0$ (with $|(\bar{\epsilon}^2, \bar{\epsilon})| \leq 1/2$) such that for every $\epsilon \in (0, \bar{\epsilon})$,

$$\left|\Phi_\epsilon^{\bar{\theta}}(z, t) - G^{\bar{\theta}}(z, t)\right| \leq \frac{\mu}{2} \qquad \forall (z, t) \in \left(E \times \mathrm{Ker}(D_0 F^{\bar{\theta}})\right) \cap B(0, 1).$$

Take now θ near $\bar{\theta}$. By the continuity of the mapping $\theta \to \Phi_\epsilon^\theta$, we have

$$\left|\Phi_\epsilon^\theta(z,t) - G^{\bar{\theta}}(z,t)\right| \leq \mu \qquad \forall (z,t) \in \big(E \times \mathrm{Ker}(D_0 F^{\bar{\theta}})\big) \cap B(0,1).$$

By Lemma 2.5.9 applied to $\tilde{G} = \Phi_\epsilon^\theta$, we infer that $\bar{B}(0, c^{\bar{\theta}})$ is contained in $\Phi_\epsilon^\theta\big(B(0,1)\big)$, which in turn implies that for every $z \in \mathbb{R}^N$ such that $|z| = |z - F^{\bar{\theta}}(\bar{u})| < c^{\bar{\theta}}\epsilon^2$, there are w_1, w_2 in X such that

$$z = F^\theta(w_1 + w_2), \quad w_1 \in \mathrm{Ker}(D_{\bar{u}} F^\theta), \quad \|w_1\|_X < \epsilon, \quad \|w_2\|_X < \epsilon^2.$$

We conclude easily as in the proof of Theorem 4.2.6. □

The control system which is relevant in the present section is not always controllable at first order. We need sufficient condition for controllability at second order.

2.5.4 Second-order controllability results

Using the same notations as above, we say that the control system (2.6) is *controllable at second order around* $\bar{u}$ in $\mathbb{R}^m$ if there are $\mu, K > 0$ such that for every $\gamma \in B\Big(\bar{\gamma}(T), \mu\Big)$, there is $u \in L^2\big([0,T]; \mathbb{R}^m\big)$ satisfying

$$E^{\bar{\gamma},T}(u) = \gamma \quad \text{and} \quad \|u\|_{L^2} \leq K\,|\gamma - \bar{\gamma}(T)|^{1/2}\,.$$

Obtaining such a property requires a study of the End-Point mapping at second order. For every $v \in L^2([0,T], \mathbb{R}^m)$, the second derivative of $E^{\bar{\gamma},T}$ at $\bar{u}$ is given by (see [61])

$$D^2 E^{\bar{\gamma},T}(\bar{u}).(v,v) = 2S(T)\int_0^T S(t)^{-1}\Big(C(t) + D(t)\Big)dt,$$

where

$$C(t) = \sum_{i=1}^m v_i(t) DX^i(\bar{\gamma}(t)).(\varphi(t)),$$

$$D(t) = \frac{1}{2}\Big(D^2X^0(\bar{\gamma}(t)) + \sum_{i=1}^m \bar{u}_i(t) D^2X^i(\bar{\gamma}(t))\Big).(\varphi(t), \varphi(t)),$$

and

$$\varphi(t) = S(t)\int_0^t S(s)^{-1}B(s)v(s)ds.$$

The following theorem describes a second order controllability result.

Theorem 2.5.11 *Let us assume that the End-Point mapping* $E^{\bar{\gamma},T} : L^2\big([0,T];\mathbb{R}^m\big) \to \mathbb{R}^n$ *verify the condition (4.14). There are* $\mu, K > 0$ *such that for every* $\bar{\gamma} \in \mathbb{R}^n$ *and every* $\gamma \in B\Big(\bar{\gamma}(T), \mu\Big)$, *there is* $u \in C^\infty([0,T],\mathbb{R}^k)$ *with support in* $[0,T]$ *satisfying*

$$E^{\bar{\gamma},T}(u) = \gamma \quad \textit{and} \quad \|u\|_{C^\infty} \leq K\,|\gamma - \bar{\gamma}(T)|^{1/2}.$$

Proof of Theorem 2.5.11 : The End-Point mapping $E^{\bar{\gamma},T} : L^2\big([0,T];\mathbb{R}^m\big) \to \mathbb{R}^n$ verify the condition (4.14), so there exists a vector subspace L of $KerD_0E^{\bar{\gamma},T}$ with $p := dimL \geq r$ such that

$$\lambda^* D^2_{\bar{u}} E^{\bar{\gamma},T}(v) < 0 \quad \forall v \in L \quad \forall \lambda \in \big(\mathrm{Im}\big(D_{\bar{u}}E^{\bar{\gamma},T}\big)\big)^\perp \setminus \{0\}. \tag{2.27}$$

Remember that the set of controls $u \in C^\infty([0,T],\mathbb{R}^m)$ with $supp(u) \subset (0,T)$ is dense in $L^2([0,T],\mathbb{R}^m)$, then there are p smooth controls $u^1, ..., u^p : [0,T] \to \mathbb{R}^k$ with $\mathrm{Supp}(u^j) \subset (0,T)$ $\forall j = 1,\ldots,p$, such that

$$\lambda^* D^2_{\bar{u}} E^{\bar{\gamma},T}(u) < 0 \quad \forall u := \sum_{j=1}^p \lambda_j u^j \in L \quad \forall \lambda \in \big(\mathrm{Im}\big(D_{\bar{u}}E^{\bar{\gamma},T}\big)\big)^\perp \setminus \{0\}. \tag{2.28}$$

Define $F : \mathbb{R}^p \to \mathbb{R}^n$ by

$$F(\lambda) := E^{\bar{\gamma},T}\Big(\sum_{j=1}^p \lambda_j u^j\Big) \qquad \forall \lambda = (\lambda_1, ..., \lambda_p) \in \mathbb{R}^p.$$

The function F is well-defined, smooth, and satisfies $F(0) = E^{\bar{\gamma},T}(0) = \bar{\gamma}(T)$. Its second differential at $\lambda = 0$ is given by

$$D^2F(0)(\lambda,\xi) = D^2E^{\bar{\gamma},T}(0)\Big(\sum_{j=1}^p \lambda_j u^j, \sum_{j=1}^p \xi_j u^j\Big).$$

So thanks to (2.28), the map F verify the assumption (4.14). Hence thanks to Theorem 4.2.6, there exist $\bar{\epsilon}, c \in (0,1)$ such that for every $\epsilon \in (0,\bar{\epsilon})$ the following property holds : For every $\lambda \in \mathbb{R}^p, \gamma \in \mathbb{R}^n$ with

$$\|\lambda - 0\|_{\mathbb{R}^p} < \epsilon, \quad |\gamma - F(\lambda)| < c\,\epsilon^2, \tag{2.29}$$

there are $w_1, w_2 \in \mathbb{R}^p$ such that

$$\gamma = F\big(\lambda + w_1 + w_2\big), \tag{2.30}$$

and

$$w_1 \in \mathrm{Ker}\,(D_\lambda F)\,, \quad \big\|w_1\big\|_{\mathbb{R}^p} < \epsilon, \quad \big\|w_2\big\|_{\mathbb{R}^p} < \epsilon^2. \tag{2.31}$$

Apply the above property with $\lambda = 0$ and $\gamma \in \mathbb{R}^n$ such that

$$\left|\gamma - \bar{\gamma}(T)\right| =: \frac{c\epsilon^2}{2} \text{ with } \epsilon < \bar{\epsilon}.$$

Therefore by the above property, there are $w_1, w_2 \in \mathbb{R}^p$ such that

$$\gamma = F\big(w_1 + w_2\big),$$

and

$$w_1 \in \operatorname{Ker}\left(D_\lambda F\right), \quad \left|w_1\right| < \epsilon, \quad \left|w_2\right| < \epsilon^2.$$

Note that any

$$u = \sum_{b=1}^{p} \lambda_b u^b \quad \text{with} \quad \lambda = (\lambda_1, ..., \lambda_p) \in \mathbb{R}^p$$

is a smooth control whose support is strictly contained in $[0, T]$ and there exists $L > 0$ such that

$$\left\|u\right\|_{C^\infty} \leq L\Big(\left|w_1\right| + \left|w_2\right|\Big) \leq L(\epsilon + \epsilon^2).$$

We infer that (for $\epsilon > 0$ small enough)

$$\gamma = E^{\bar{\gamma},T}\big(u\big) \quad \text{and} \quad \left\|u\right\|_{C^\infty} \leq 2L\epsilon = 2L\sqrt{\frac{2}{c}}\,\left|\gamma - \bar{\gamma}(T)\right|^{1/2}.$$

□

Chapitre 3

A geometric control proof of Franks' lemma for Geodesic Flows

Summary : We provide an elementary proof of the Franks lemma for geodesic flows that uses basic tools of geometric control theory.

3.1 Introduction

In 1971, John Franks stated and proved an elegant lemma (see [23, lemma 1.1]) showing how to perturb the derivative of a diffeomorphism along a periodic orbit by small perturbations of the diffeomorphism on a neighbourhood of the orbit. Since the original Franks' lemma concerns diffeomorphisms, its proof is quite simple. The Franks lemma has since been proven in other interesting contexts such as geodesic flows (see [15] and [12]) and more generally Hamiltonians flows (see [79]). In this work, we focus on the Franks lemma for geodesic flows. This problem was first studied in the particular case of surfaces by Contreras and Paternain (see [15, Theorem 4.1]). They proved that on any surface, the linearized Poincaré map along any geodesic segment of length 1 can be freely perturbed in a neighborhood inside $\mathrm{Sp}(1)$ by a C^2-small perturbation of the metric, where for every $m \in \mathbb{N}^*$, the symplectic group $\mathrm{Sp}(m)$ is defined by

$$\mathrm{Sp}(m) := \Big\{ A \in M_{2m}(\mathbb{R}) \mid A^* \mathbb{J} A = \mathbb{J} \Big\},$$

with

$$\mathbb{J} = \begin{bmatrix} 0 & I_m \\ -I_m & 0 \end{bmatrix}.$$

In 2010, Contreras studied the higher-dimensional analogue (see [12, Theorem 7.1]). He generalized the previous result for a special set of metrics : those such that every

geodesic segment of length $\frac{1}{2}$ has a point whose curvature matrix has all its eigenvalues distinct and separated by a uniform bound. The proof was long and technical.

Let M be a closed manifold of dimension $n \geq 2$ endowed with a Riemannian metric g and S^gM be the unit tangent bundle. Given a geodesic arc of length 1

$$\gamma : [0,1] \longrightarrow S^gM,$$

with unit speed and Σ_0 and Σ_1 transverse sections at $\gamma(0)$ and $\gamma(1)$ respectively. Let $\mathbb{P}_g(\Sigma_0, \Sigma_1, \gamma)$ be a Poincaré map going from Σ_0 to Σ_1. One can choose Σ_0 and Σ_1 such that the *linearized Poincaré* map

$$P_g(\gamma)(1) := d_{\gamma(0)}\mathbb{P}_g(\Sigma_0, \Sigma_1, \gamma)$$

is a symplectic endomorphism of $\mathbb{R}^{n-1} \times (\mathbb{R}^{n-1})^*$ (in local coordinates). Let $\mathcal{R}^k(M)$, $k \in \mathbb{N} \cup \{+\infty\}$ be the set of all C^k Riemannian metrics g on M. If $n \geq 3$, we denote by $\mathcal{G}_1$ the set of Riemannian metrics on M such that every unit geodesic segment of lenght 1 admits a point where the curvature matrix has distinct eigenvalues. Denote by $\mathcal{R}^k(M, \mathcal{G}_1)$ the set of all Riemannian metrics g on M such that if $n = 2$, $g \in \mathcal{R}^k(M)$ and for $n \geq 3$, $g \in \mathcal{R}^k(M) \cap \mathcal{G}_1$. For every $k \geq 2$, $\mathcal{R}^k(M, \mathcal{G}_1)$ is an open and dense subset of $\mathcal{R}^k(M)$. Consider the map $S : \mathcal{R}^k(M, \mathcal{G}_1) \longrightarrow \mathrm{Sp}(n-1)$ given by $S(\bar{g}) = P_{\bar{g}}(\gamma)(1)$. The following theorem summarizes the Franks lemma for geodesic flows on surfaces and its higher-dimensional analogue (under the Contreras assumption on the spectrum of the curvature matrix) with estimates on the size of perturbation in terms of the radius of the ball of $\mathrm{Sp}(n-1)$.

Theorem 3.1.1 *Let $g_0 \in \mathcal{R}^k(M, \mathcal{G}_1), 2 \leq k \leq \infty$. There exists $\bar{r}, K > 0$ such that for any geodesic arc γ of g_0 of lenght 1 and any $r \in (0, \bar{r})$,*

$$B\Big(S(g_0), Kr\Big) \cap Sp(n-1) \subset S\Big(B_{C^k}(g_0, r)\Big).$$

Let $\mathcal{F} := \{\xi_1, ..., \xi_N\}$ be a finite set of geodesic segments that are transverse to γ. We have the following result.

Proposition 3.1.2 *For any tubular neighborhood W of γ and any finite set $\mathcal{F}$ of transverse geodesics, the support of the C^2 perturbation can be contained in $W \setminus V$ for some neighborhood V of the transverse geodesics $\mathcal{F}$.*

Franks' Lemma type results has many interesting applications. For instance, in [15] Contreras and Paternain used it to show that the set of C^∞ Riemannian metrics on $\mathbb{S}^2$ or $\mathbb{RP}^2$ whose geodesic flow has positive topological entropy is open and dense in

the C^2 topology. In [12] Contreras used the Franks lemma to prove that a C^2 generic Riemannian metric has a non-trivial hyperbolic basic set in its geodesic flow. The author says that this perturbation lemma is "the main technical difficulty of the paper". Recently, Visscher (see [78]) gave a shorter and less technical proof for the two cases.

The purpose of the present chapter is to provide a simple proof of the Franks lemma using geometric control tools. Such techniques have been initially introduced by Rifford and Ruggiero in [62]. We mention that recently in a joint work with Rifford and Ruggiero, we obtained a Franks lemma at lower order ($r < K\sqrt{\delta}$) without the Contreras assumption (see [43]).

The chapter is organized as follows. In the next section, we introduce some preliminaries in geometric control theory. We describe the relationship between local controllability and the properties of the End-Point mapping. In Section 3.3, we provide the proof of Theorem 3.1.1. Then, in Section 3.4, we provide the proof of Proposition 3.1.2.

3.2 Preliminaries in geometric control theory

Our aim here is to provide sufficient conditions for first order local controllability results. This kind of results could be developed for nonlinear control systems on smooth manifolds. For sake of simplicity, we restrict our attention here to the case of affine control systems on the set of (symplectic) matrices. We refer the interested reader to [1, 16, 61] for a further study in control theory.

3.2.1 The End-Point mapping

Let us a consider a *bilinear control system* on $M_{2m}(\mathbb{R})$ (with $m, k \geq 1$), of the form

$$\dot{X}(t) = A(t)X(t) + \sum_{i=1}^{k} u_i(t)B_iX(t), \qquad \text{for a.e.} \quad t, \tag{3.1}$$

where the *state* $X(t)$ belongs to $M_{2m}(\mathbb{R})$, the *control* $u(t)$ belongs to $\mathbb{R}^k$, $t \in [0, T] \mapsto A(t)$ (with $T > 0$) is a smooth map valued in $M_{2m}(\mathbb{R})$, and $B_1, \ldots, B_k$ are k matrices

in $M_{2m}(\mathbb{R})$. Given $\bar{X} \in M_{2m}(\mathbb{R})$ and $\bar{u} \in L^2\big([0,T];\mathbb{R}^k\big)$, the Cauchy problem

$$\dot{X}(t) = A(t)X(t) + \sum_{i=1}^{k} \bar{u}_i(t)B_iX(t), \quad \text{for a.e.} \quad t \in [0,T], \qquad X(0) = \bar{X}, \quad (3.2)$$

possesses a unique solution $X_{\bar{X},\bar{u}}(\cdot)$. The *End-Point mapping* associated with $\bar{X}$ in time $T > 0$ is defined as

$$\begin{array}{rcl} E^{\bar{X},T} \,:\, L^2\big([0,T];\mathbb{R}^k\big) & \longrightarrow & M_{2m}(\mathbb{R}) \\ u & \longmapsto & X_{\bar{X},u}(T). \end{array}$$

It is a smooth mapping. Given $\bar{X} \in M_{2m}(\mathbb{R})$, $\bar{u} \in L^2\big([0,T];\mathbb{R}^k\big)$, and setting $\bar{X}(\cdot) := X_{\bar{X},\bar{u}}(\cdot)$, the differential of $E^{\bar{X},T}$ at $\bar{u}$ is given by the linear operator

$$\begin{array}{rcl} D_{\bar{u}}E^{\bar{X},T} \,:\, L^2\big([0,T];\mathbb{R}^k\big) & \longrightarrow & M_{2m}(\mathbb{R}) \\ v & \longmapsto & Y(T), \end{array}$$

where $Y(\cdot)$ is the unique solution to the Cauchy problem

$$\begin{cases} \dot{Y}(t) = A(t)Y(t) + \sum_{i=1}^{k} v_i(t)B_i\bar{X}(t) \quad \text{for a.e.} \quad t \in [0,T], \\ Y(0) = 0. \end{cases} \quad (3.3)$$

Note that if we denote by $S(\cdot)$ the solution to the Cauchy problem

$$\begin{cases} \dot{S}(t) = A(t)S(t), \\ S(0) = I_{2m}, \end{cases} \quad (3.4)$$

then there holds

$$D_{\bar{u}}E^{\bar{X},T}(v) = \sum_{i=1}^{k} S(T) \int_0^T v_i(t)S(t)^{-1}B_i\bar{X}(t)\,dt, \quad (3.5)$$

for every $v \in L^2([0,T];\mathbb{R}^k)$.

Let $\mathrm{Sp}(m)$ be the symplectic group in $M_{2m}(\mathbb{R})$ ($m \geq 1$), that is the smooth submanifold of matrices $X \in M_{2m}(\mathbb{R})$ satisfying

$$X^*\mathbb{J}X = \mathbb{J} \quad \text{where } \mathbb{J} = \begin{bmatrix} 0 & I_m \\ -I_m & 0 \end{bmatrix}.$$

$\mathrm{Sp}(m)$ has dimension $p := 2m(2m+1)/2$. Denote by $\mathcal{S}(2m)$ the set of symmetric matrices in $M_{2m}(\mathbb{R})$. The tangent space to $\mathrm{Sp}(m)$ at the identity matrix is given by

$$T_{I_{2m}}\mathrm{Sp}(m) = \Big\{Y \in M_{2m}(\mathbb{R}) \,|\, \mathbb{J}Y \in \mathcal{S}(2m)\Big\}.$$

Therefore, if there holds

$$\mathbb{J}A(t),\, \mathbb{J}B_1,\, \ldots,\, \mathbb{J}B_k \in \mathcal{S}(2m) \qquad \forall t \in [0,T], \tag{3.6}$$

then $\mathrm{Sp}(m)$ is invariant with respect to (4.1), that is for every $\bar{X} \in \mathrm{Sp}(m)$ and $\bar{u} \in L^2\big([0,T];\mathbb{R}^k\big)$,

$$X_{\bar{X},u}(t) \in \mathrm{Sp}(m) \qquad \forall t \in [0,T].$$

In particular, this means that for every $\bar{X} \in \mathrm{Sp}(m)$, the End-Point mapping $E^{\bar{X},T}$ is valued in $\mathrm{Sp}(m)$. Given $\bar{X} \in \mathrm{Sp}(m)$ and $\bar{u} \in L^2\big([0,T];\mathbb{R}^k\big)$, we are interested in local controllability properties of (4.1) around $\bar{u}$. The control system (4.1) is called *controllable around* $\bar{u}$ in $\mathrm{Sp}(m)$ (in time T) if for every final state $X \in \mathrm{Sp}(m)$ close to $X_{\bar{X},u}(T)$ there is a control $u \in L^2\big([0,T];\mathbb{R}^k\big)$ which steers $\bar{X}$ to X, that is such that $E^{\bar{X},T}(u) = X$. Such a property is satisfied as soon as $E^{\bar{X},T}$ is locally open at $\bar{u}$.

3.2.2 First order controllability results

Given $T > 0$, $\bar{X} \in \mathrm{Sp}(m)$, a mapping $t \in [0,T] \mapsto A(t) \in M_{2m}(\mathbb{R})$ and k matrices $B_1, \ldots, B_k \in M_{2m}(\mathbb{R})$ satisfying (4.5), and $\bar{u} \in L^2\big([0,T];\mathbb{R}^k\big)$, we say that the control system (4.1) is *controllable at first order around* $\bar{u}$ in $\mathrm{Sp}(m)$ if the mapping $E^{\bar{X},T} : L^2\big([0,T];\mathbb{R}^k\big) \to \mathrm{Sp}(m)$ is a *submersion* at $\bar{u}$, that is if the linear operator

$$D_{\bar{u}}E^{\bar{X},T} \,:\, L^2\big([0,T];\mathbb{R}^k\big) \longrightarrow T_{\bar{X}(T)}\mathrm{Sp}(m),$$

is surjective (with $\bar{X}(T) := X_{\bar{X},u}(T)$). The following sufficient condition for first order controllability is given in [62, Proposition 2.1]. For sake of completeness, we provide its proof.

Proposition 3.2.1 *Let $T > 0$, $t \in [0,T] \mapsto A(t)$ a smooth mapping and $B_1, \ldots, B_k \in M_{2m}(\mathbb{R})$ be matrices in $M_{2m}(\mathbb{R})$ satisfying (4.5). Define the k sequences of smooth mappings*

$$\{B_1^j\}, \ldots, \{B_k^j\} : [0,T] \to T_{I_{2m}}Sp(m)$$

by

$$\begin{cases} B_i^0(t) = B_i \\ B_i^j(t) = \dot{B}_i^{j-1}(t) + B_i^{j-1}(t)A(t) - A(t)B_i^{j-1}(t), \end{cases} \tag{3.7}$$

for every $t \in [0,T]$ and every $i \in \{1,\ldots,k\}$. Assume that there exists some $\bar{t} \in [0,T]$ such that

$$Span\Big\{B_i^j(\bar{t}) \,|\, i \in \{1,\ldots,k\}, j \in \mathbb{N}\Big\} = T_{I_{2m}}Sp(m). \tag{3.8}$$

Then for every $\bar{X} \in Sp(m)$, the control system (4.1) is controllable at first order around $\bar{u} \equiv 0$.

Proof of Proposition 4.2.1 : If $D_{\bar{u}}E^{\bar{X},T}$ is not onto, there is a nonzero matrix $Y \in M_{2m}(\mathbb{R})$ such that

$$\bar{X}(T)^*\mathbb{J}Y \in \mathcal{S}(2m)$$

and

$$Tr\Big(Y^* D_{\bar{u}}E^{\bar{X},T}(v)\Big) = 0 \qquad v \in L^2\big([0,T];\mathbb{R}^k\big).$$

By (4.4), this can be written as

$$\sum_{i=1}^{k}\int_0^T v_i(t)Tr(Y^*S(T)S(t)^{-1}B_i\bar{X}(t))\,dt = 0 \quad \forall v \in L^2\big([0,T];\mathbb{R}^k\big).$$

Taking for every $i \in \{1,...,k\}$,

$$v_i(t) := Tr(Y^*S(T)S(t)^{-1}B_i\bar{X}(t)) \quad t \in [0,T],$$

we obtain that

$$Tr\Big(Y^*S(T)S(t)^{-1}B_i\bar{X}(t)\Big) = 0 \quad \forall t \in [0,T]. \tag{3.9}$$

The above equality at $t = \bar{t}$ yields

$$Tr\Big(Y^*S(T)S(\bar{t})^{-1}B_i^0(\bar{t})\bar{X}(\bar{t})\Big) = 0.$$

Using that $\frac{d}{dt}(S(t)^{-1}) = -S(t)^{-1}A(t), \dot{\bar{X}}(t) = A(t)\bar{X}(t)$ and differentiating (3.9) at $t = \bar{t}$ again and again gives

$$Tr\Big(Y^*S(T)S(\bar{t})^{-1}B_i^j(\bar{t})\bar{X}(\bar{t})\Big) = 0 \quad \forall j \in \mathbb{N}, \forall i \in \{1,...,k\}\,.$$

By (4.5), we have

$$\bar{X}(T)^*\mathbb{J}\Big(S(T)S(\bar{t})^{-1}B_i^j(\bar{t})\bar{X}(\bar{t})\Big) \in \mathcal{S}(2m).$$

So all the matrices $S(T)S(\bar{t})^{-1}B_i^j(\bar{t})\bar{X}(\bar{t})$ belong to $T_{\bar{X}(T)}\mathrm{Sp}(m)$. Since the matrix $S(T)S(\bar{t})^{-1}$ is invertible and (4.7) holds, we infer that

$$Tr(Y^*H) = 0 \quad \forall H \in T_{\bar{X}(T)}\mathrm{Sp}(m)$$

which yields a contradiction. □

As a corollary, we deduce a local controllability property on $\mathrm{Sp}(m)$.

Proposition 3.2.2 *Assume that assumptions of Proposition 4.2.1 hold. Then, for every $\bar{X} \in Sp(m)$ and $T > 0$, there are $\mu, \nu > 0$, p smooth controls $u^1, \cdots, u^p : [0,T] \to \mathbb{R}^k$ with $Supp(u^j) \subset (0,T)$ for $j = 1, ..., p$ and a smooth mapping*

$$U = (U_1, \cdots, U_p) : B\Big(\bar{X}(T), \mu\Big) \cap Sp(m) \longrightarrow B(0, \nu)$$

with $U\Big(\bar{X}(T)\Big) = 0$ such that for every $X \in B\Big(\bar{X}(T), \mu\Big) \cap Sp(m)$,

$$E^{\bar{X},T}\left(\sum_{j=1}^{p} U_j(X) u^j\right) = X.$$

Proof of Proposition 3.2.2 : Remember that the set of controls $u \in C^\infty([0,T], \mathbb{R}^k)$ with $supp(u) \subset (0,T)$ is dense in $L^2([0,T], \mathbb{R}^k)$ and from Proposition 4.2.1, we know that the mapping $E^{\bar{X},T} : L^2\big([0,T]; \mathbb{R}^k\big) \to \mathrm{Sp}(m)$ is a smooth submersion at $\bar{u} \equiv 0$. Then there are p smooth controls $u^1, ..., u^p : [0,T] \to \mathbb{R}^k$ with $Supp(u^j) \subset (0,T)$ for $j = 1, ..., p$ such that

$$Span\left\{DE^{\bar{X},T}(\bar{u})(u^j) \,|\, j = 1, ..., p\right\} = T_{\bar{X}(T)}\mathrm{Sp}(m). \tag{3.10}$$

Define $F : \mathbb{R}^p \to Sp(m)$ by

$$F(\lambda) := E^{\bar{X},T}\Big(\bar{u} + \sum_{j=1}^{p} \lambda_j u^j\Big) \qquad \forall \lambda = (\lambda_1, ..., \lambda_p) \in \mathbb{R}^p.$$

The function F is well-defined, smooth, and satisfies $F(0) = E^{\bar{X},T}(\bar{u}) = \bar{X}(T)$. Its differential at $\lambda = 0$ is given by

$$DF(0)(\lambda) = \sum_{j=1}^{p} \lambda_j DE^{\bar{X},T}(\bar{u})(u^j) \quad \forall \lambda \in \mathbb{R}^p,$$

hence it is invertible By (3.10). By the Inverse Function Theorem, we conclude the proof. □

Remark 3.2.3 *The radii depend on the size of the datas (see [61, Theorem B.1.4]).*

The result below follows easily from Proposition 3.2.2.

Proposition 3.2.4 *Assume that there exists $\bar{t} \in [0,T]$ such that (4.7) holds. Then there are $\mu, C > 0$ such that for every $X \in Sp(m)$ with $\big\|X - \bar{X}(T)\big\| < \mu$, there is a C^∞ function $u : [0,T] \longrightarrow \mathbb{R}^{\frac{m(m+1)}{2}}$ such that*

$$Supp(u) \subset (0,T), \quad \|u\|_{C^k} < C\,\big\|X - \bar{X}(T)\big\|$$

and

$$X_u(T) = X.$$

3.3 Proof of Theorem 1.1

Since M is compact, there exists $\tau > 0$ such that

$$\gamma\Big((1-\tau,1)\Big) \cap \gamma\Big([0,1-\tau]\Big) = \emptyset,$$

for every geodesic γ arc of g_0. Let $\gamma : [0,1] \longrightarrow S^gM$ be a geodesic arc of g_0 of length 1 (this can be obtained by scaling).

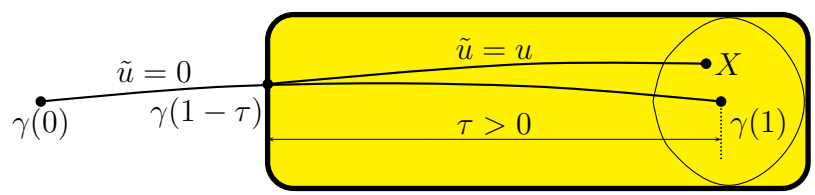

FIGURE 3.1 – Avoiding self-intersection

Fix a set of Fermi coordinates $\{(t,x)\}$ along γ. The linearized Poincaré map $P_{g_0}(\gamma)(t)$ satisfies a first order system of the form (see [62, Section 3])

$$\dot{W}_0(t) = \begin{pmatrix} 0 & I_{n-1} \\ -K(t) & 0 \end{pmatrix} W_0(t) \quad t \in [1-\tau, 1],$$

where $K(t)$ represents the matrix of the sectional curvature of the metric g_0. In fact, if $g_0 := (g_0^{kl})_{k,l=0,\dots,n-1}$, we have for any $i,j = 1,\dots,n-1$,

$$K(t)_{ij} = -\frac{1}{2}\frac{\partial^2}{\partial x^i \partial x^j} g_0^{00}(t,0).$$

Let $f : M \longrightarrow \mathbb{R}$ be a C^2 function with $f(t,0) = 0$ and $\frac{\partial}{\partial x^k} f(t,0) = 0$ $\forall k = 1,\dots,n-1$. Let $u := (u_{ij})_{i,j=1,\dots,n-1}$ be the function defined by

$$u_{ij}(t) = -\frac{1}{2}\frac{\partial^2}{\partial x_i x_j} f(t,0), \quad \forall i,j = 1,\dots,n-1 \quad \textit{and} \quad t \in [1-\tau, 1].$$

Consider the metric $g_u := e^f g_0$. The linearized Poincaré map $P_{g_u}(\gamma)(t)$ is given by

$$\dot{W}_u(t) = \begin{pmatrix} 0 & I_{n-1} \\ -K_{g_u} & 0 \end{pmatrix} W_u(t) \quad t \in [1-\tau, 1], \tag{3.11}$$

where

$$K_{g_u}(t) = K(t) + \sum_{i=1}^{m} u_{ii}(t)E(ii) + \sum_{1\le i<j}^{m} u_{ij}(t)E(ij), \tag{3.12}$$

with $E(ij), 1 \le i \le j \le m$ are the symmetric $n-1 \times n-1$ matrices defined by

$$(E(ij))_{k,l} = \delta_{ik}\delta_{jl} + \delta_{il}\delta_{jk} \qquad \forall i,j = 1,\dots,n-1.$$

Set $m = n-1$, $k := m(m+1)/2$. The formulas (3.11)-(3.12) giving $P_{g_u}(\gamma)(t)$ can be viewed as a control system of the form

$$\dot{X}(t) = A(t)X(t) + \sum_{i\le j=1}^{m} u_{ij}(t)\mathcal{E}(ij)X(t), \tag{3.13}$$

where the $2m \times 2m$ matrices $A(t), \mathcal{E}(ij)$ are defined by

$$A(t) := \begin{pmatrix} 0 & I_m \\ -K(t) & 0 \end{pmatrix} \qquad \forall t \in [1-\tau, 1]$$

and

$$\mathcal{E}(ij) := \begin{pmatrix} 0 & 0 \\ E(ij) & 0 \end{pmatrix}.$$

To avoid eventually self-intersection at $\gamma(1)$, we assume that the support of u is included in $(1-\tau+\delta, 1-\delta)$, with $0 < \delta < \tau$.
It is clear that if for every final state $X \in \mathrm{Sp}(m)$ close to $\gamma(1)$ there is a control $u \in L^2\big([1-\tau,1];\mathbb{R}^k\big)$ which steers $\gamma(1-\tau)$ to X (see Figure 1), then the control $\tilde{u}$ defined by

$$\tilde{u}(t) := \begin{cases} 0 & \text{if } t \in [0, 1-\tau] \\ u(t) & \text{otherwise.} \end{cases} \qquad \text{for a.e. } t \in [0,1].$$

steers $\gamma(0)$ to X. For sake of simplicity assume from now that $[1-\tau,1] = [0,1]$.

Let us first prove the higher-dimensional ($n \ge 3$) Franks' lemma for geodesic flows.
The Jacobi matrix $K(t)$ is real and symmetric, so it is diagonalisable and there are $\lambda_1(t), ..., \lambda_m(t) \in \mathbb{R}$, $P(t) \in GL_m(\mathbb{R})$ such that $K(t) = P(t)^{-1} diag\Big(\lambda_1(t), ..., \lambda_m(t)\Big)P(t)$.
Recall that by hypothesis,

$$\exists\ \bar{t} \in [0,1]\ /\ \lambda_i(\bar{t}) \ne \lambda_j(\bar{t}),\ \forall i \ne j. \tag{3.14}$$

Hence if we change our coordinates, we can suppose that $K(\bar{t}) = diag\Big(\lambda_1(\bar{t}), ..., \lambda_m(\bar{t})\Big)$.
Since our control system has the form (4.1), all the results gathered in Section 4.2

apply. Since the $\mathcal{E}(ij)$ do not depend on time, we check easily that the matrices $B^0_{ij}, B^1_{ij}, B^2_{ij}, B^3_{ij}$ associated to our system are given by

$$\begin{cases} B^0_{ij}(t) = \mathcal{E}(ij) \\ B^1_{ij}(t) = [\mathcal{E}(ij), A(t)] \\ B^2_{ij}(t) = [[\mathcal{E}(ij), A(t)], A(t)] \\ B^3_{ij}(t) = \dot{B}^2_{ij}(t) + [[[\mathcal{E}(ij), A(t)], A(t)], A(t)], \end{cases}$$

for every $t \in [0,1]$. An easy computation yields for any $i, j = 1, \dots, m$ with $i \leq j$ and any $t \in [0,1]$,

$$[\mathcal{E}(ij), A(t)] = \begin{pmatrix} -E(ij) & 0 \\ 0 & E(ij) \end{pmatrix},$$

$$[[\mathcal{E}(ij), A(t)], A(t)] = \begin{pmatrix} 0 & -2E(ij) \\ -E(ij)K(t) - K(t)E(ij) & 0 \end{pmatrix},$$

$$[[[\mathcal{E}(ij), A(t)], A(t)], A(t)] = \begin{pmatrix} 3E(ij)K(t) + K(t)E(ij) & 0 \\ 0 & -E(ij)K(t) - 3K(t)E(ij) \end{pmatrix}.$$

We need to show that $S = \mathrm{Span}\Big\{B^l_{ij}(\bar{t}) \,|\, 1 \leq i \leq j \leq m \textit{ and } l = 0,1,2,3\Big\}$ has dimension $d = 2m(2m+1)/2$. For all $1 \leq i \leq j \leq k$ we have

$$\begin{pmatrix} 3E(ij)K(\bar{t}) + K(\bar{t})E(ij) & 0 \\ 0 & -E(ij)K(\bar{t}) - 3K(\bar{t})E(ij) \end{pmatrix} =$$

$$2\begin{pmatrix} E(ij)K(\bar{t}) + K(\bar{t})E(ij) & 0 \\ 0 & -E(ij)K(\bar{t}) - K(\bar{t})E(ij) \end{pmatrix} + \begin{pmatrix} [E(ij), K(\bar{t})] & 0 \\ 0 & [E(ij), K(\bar{t})] \end{pmatrix}.$$

Moreover, it holds that

$$\begin{pmatrix} 0 & 0 \\ -E(ij)\dot{K}(\bar{t}) - \dot{K}(\bar{t})E(ij) & 0 \end{pmatrix} \in \mathrm{Span}\Big\{B^0_{ij}(\bar{t}) \,|\, 1 \leq i \leq j \leq m\Big\},$$

and

$$\begin{pmatrix} E(ij)K(\bar{t}) + K(\bar{t})E(ij) & 0 \\ 0 & -E(ij)K(\bar{t}) - K(\bar{t})E(ij) \end{pmatrix} \in \mathrm{Span}\Big\{B^1_{ij}(\bar{t}) \,|\, 1 \leq i \leq j \leq m\Big\}.$$

Let's now compute the $m \times m$ matrices $[E(ij), K(\bar{t})]$ for all $1 \leq i < j \leq m$:

$$[E(ij), K(\bar{t})] := (c_{rs})_{r,s} \textit{ with } \begin{cases} c_{rs} = 0 \text{ if } (r,s) \neq (i,j) \text{ or } (r,s) \neq (j,i), \\ c_{ij} = \lambda_j(\bar{t}) - \lambda_i(\bar{t}), \\ c_{ji} = \lambda_i(\bar{t}) - \lambda_j(\bar{t}). \end{cases}$$

Hence, using the condition (3.14) we obtain

$$\operatorname{span}\left\{\begin{pmatrix}[E(ij),K(\bar{t})] & 0\\ 0 & [E(ij),K(\bar{t})]\end{pmatrix} \mid i\le j\right\} = \operatorname{Span}\left\{\begin{pmatrix}F(pq) & 0\\ 0 & F(pq)\end{pmatrix} \mid p<q\right\},$$

where $F(pq)$ is the skew-symmetric matrix defined by

$$(F(pq))_{rs} := \delta_{rp}\delta_{sq} - \delta_{rq}\delta_{sp}.$$

Therefore we have

$$S = \operatorname{Span}\left\{B^l_{ij}(\bar{t}), \begin{pmatrix}F(pq) & 0\\ 0 & F(pq)\end{pmatrix} \mid 1\le i\le j\le m\,,\ l=0,1,2 \textit{ and } 1\le p<q\le m\right\}.$$

This allow us to compute the dimension of S. In fact, since the matrices $\mathcal{E}(ij)$ form a basis of the vector space of symmetric matrices $\mathcal{S}(m)$, we check easily that the vector space

$$\operatorname{Span}\Big\{\mathcal{E}(ij), [[\mathcal{E}(kl), A(t)]\,, A(t)] \mid i,j,k,l\Big\}$$

has dimension $m(m+1)$. It remains to check that the rest spans a space of dimension $d-m(m+1)=m^2$. The spaces respectively spanned by

$$\Big\{[\mathcal{E}(ij), A(t)] \mid i,j\Big\}$$

and

$$\left\{\begin{pmatrix}F(pq) & 0\\ 0 & F(pq)\end{pmatrix} \mid p,q\right\}$$

are orthogonal with respect to the scalar product $\operatorname{tr}(P^*Q)$. The first has dimension $m(m+1)/2$. It remains to show that the second one has dimension $m(m-1)/2$. The second space is generated by the matrices of the form

$$\begin{pmatrix}F(pq) & 0\\ 0 & F(pq)\end{pmatrix}$$

with $1\le p<q\le m$. Finally, the condition (4.7) is satisfied and we conclude easily using Propositions 4.2.1, 3.2.4 and a compactness argument (see Remark 3.2.3).

Let us now provide the proof of Franks' lemma for geodesic flows on surfaces. Set $m=1$, the control system (3.13) becomes

$$\dot{X}(t) = A(t)X(t) + u_{11}(t)\mathcal{E}(11)X(t),$$

where the 2×2 matrices $A(t), \mathcal{E}(11)$ are defined by

$$A(t) := \begin{pmatrix}0 & 1\\ -K(t) & 0\end{pmatrix} \qquad \forall t\in[0,1]$$

and

$$\mathcal{E}(11) := \begin{pmatrix} 0 & 0 \\ 1 & 0 \end{pmatrix}.$$

Since our control system has the form (4.1), all the results gathered in Section 4.2 apply. Since the $\mathcal{E}(11)$ do not depend on time, we check easily that the matrices $B^0_{11}, B^1_{11}, B^2_{11}$ associated to our system are given by

$$\begin{cases} B^0_{11}(t) = \mathcal{E}(11) \\ B^1_{11}(t) = [\mathcal{E}(11), A(t)] \\ B^2_{11}(t) = [[\mathcal{E}(11), A(t)], A(t)], \end{cases}$$

for every $t \in [0, T]$. An easy computation yields for any $t \in [0, T]$,

$$[\mathcal{E}(11), A(t)] = \begin{pmatrix} -1 & 0 \\ 0 & 1 \end{pmatrix},$$

$$[[\mathcal{E}(11), A(t)], A(t)] = \begin{pmatrix} 0 & -2 \\ -2K(t) & 0 \end{pmatrix}.$$

We check easily that $dim\Big(\mathrm{Span}\Big\{B^0_{11}(0),\ B^1_{11}(0), B^2_{11}(0)\Big\}\Big) = 3 = dim\Big(T_{I_2}\mathrm{Sp}(1)\Big)$. So the condition (4.7) is satisfied and the result follows from Propositions 4.2.1, 3.2.4 and a compactness argument.

3.4 Proof of Proposition 1.2

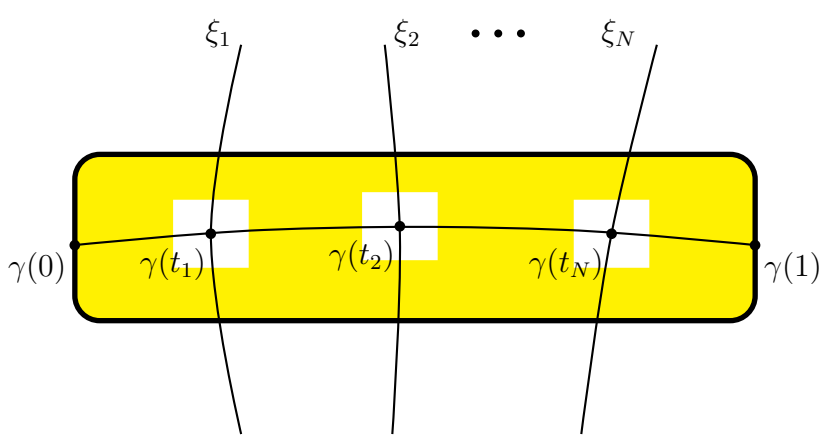

FIGURE 3.2 – Avoiding a finite number of transverse geodesics

Let $\mathcal{F} := \{\xi_1, ..., \xi_N\}$ be a finite set of geodesic segments that are transverse to γ, with for every $i = 1, ..., N$, ξ_i intersect γ at the point $\gamma(t_i)$, where $t_i \in [0, 1]$. From Proposition 3.2.2, we know that there are p smooth controls $u^1, \cdots, u^p : [0, T] \to \mathbb{R}^k$ with $Supp(u^j) \subset (0, 1)$ for $j = 1, ..., p$, such that the following End-Point mapping (associated to the control system (3.13))

$$\begin{array}{rcl} E^{I_{2m},1} \,:\, Span\,\{u^1, \cdots, u^p\} & \longrightarrow & \mathrm{Sp}(m) \\ \sum_{i=1}^p \lambda_i u^i & \longmapsto & X_{I_{2m}, \sum_{i=1}^p \lambda_i u^i}(1) \end{array}$$

is a local diffeomorphism. Take now p C^∞-functions $\tilde{u}^1, \cdots, \tilde{u}^p : [0, T] \to \mathbb{R}^k$ such that for every $j = 1, ..., p$, $Supp(\tilde{u}^j) \subset (0, 1)$, $\tilde{u}^j$ vanishes in a neighborhood $\mathcal{N}_i$ of t_i and $\tilde{u}^j$ is a equal to u^j outside of $\mathcal{N}_i$. By C^1 regularity of the End-Point mapping $E^{I_{2m},1}$, it holds that the map

$$\begin{array}{rcl} \tilde{E}^{I_{2m},1} \,:\, Span\,\{\tilde{u}^1, \cdots, \tilde{u}^p\} & \longrightarrow & \mathrm{Sp}(m) \\ \sum_{i=1}^p \lambda_i \tilde{u}^i & \longmapsto & X_{I_{2m}, \sum_{i=1}^p \lambda_i \tilde{u}^i}(1) \end{array}$$

remains a local diffeomorphism, which concludes the proof.

Chapitre 4

Franks' lemma for C^2-Mañé perturbations of Riemannian metrics

Summary : Given a compact Riemannian manifold, we prove a uniform Franks' lemma at second order for geodesic flows and apply the result in persistence theory.

4.1 Introduction

One of the most important tools of C^1 generic and stability theories of dynamical systems is the celebrated Franks Lemma [23] :

Let M be a smooth (*i.e.* of class C^∞) compact manifold of dimension $n \geq 2$ and let $f : M \longrightarrow M$ be a C^1 diffeomorphism. Consider a finite set of points $S = \{p_1, p_2, .., p_m\}$, let $\Pi = \bigoplus_{i=1}^m T_{p_i}M$, $\Pi' = \bigoplus_{i=1}^m T_{f(p_i)}M$. Then there exist $\epsilon_0 > 0$ such that for every $0 < \epsilon \leq \epsilon_0$ there exists $\delta = \delta(\epsilon) > 0$ such that the following holds :

Let $L = (L_1, L_2, .., L_m) : \Pi \longrightarrow \Pi'$ be an isomorphism such that

$$\left\| L_i - D_{p_i} f \right\| < \delta \qquad \forall i = 1, \ldots, m,$$

then there exists a C^1 diffeomorphism $g : M \longrightarrow M$ satisfying

1. $g(p_i) = f(p_i)$ for every $i = 1, \ldots, m$,
2. $D_{p_i} g = L_i$ for each $i = 1, \ldots, m$,
3. the diffeomorphim g is in the ϵ neighborhood of f in the C^1 topology.

In a few words, the lemma asserts that given a collection S of m points p_i in the manifold M, any isomorphism from Π to Π' can be the collection of the differentials of a diffeomorphism g, C^1 close to f, at each point of S provided that the isomorphism is sufficiently close to the direct sum of the maps $D_{p_i}f$, $i = 1, \ldots, m$. The sequence of points is particularly interesting for applications in dynamics when the collection S is a subset of a periodic orbit. The idea of the proof of the lemma is quite elementary : we conjugate the isomorphisms L_i by the exponential map of M in suitably small neighborhoods of the points p_i's and then glue (smoothly) the diffeomorphism f outside the union of such neighborhoods with these collection of conjugate-to-linear maps. So the proof strongly resembles an elementary calculus exercise : we can glue a C^1 function $h : \mathbb{R} \longrightarrow \mathbb{R}$ outside a small neighborhood U of a point x with the linear function in U whose graph is the line through $(x, h(x))$ with slope $h'(x)$ and get a new function that is C^1 close to h.

The Franks lemma admits a natural extension to flows, and its important applications in the study of stable dynamics gave rise to versions for more specific families of systems, like symplectic diffeomorphisms and Hamiltonian flows [63, 79]. It is clear that for specific families of systems the proof of the lemma should be more difficult that just gluing conjugates of linear maps by the exponential map since this surgery procedure in general does not preserve specific properties of systems, like preserving symplectic forms in the case of symplectic maps. The Frank's Lemma was extensively used by R. Mañé in his proof of the C^1 structural stability conjecture [47], and we could claim with no doubts that it is one of the pillars of the proof together with C. Pugh's C^1 closing lemma [56, 57] (see Newhouse [52] for the proof of the C^1 structural stability conjecture for symplectic diffeomorphisms).

A particularly challenging problem is to obtain a version of Frank's Lemma for geodesic flows. First of all, a typical perturbation of the geodesic flow of a Riemannian metric in the family of smooth flows is not the geodesic flow of another Riemannian metric. To ensure that perturbations of a geodesic flow are geodesic flows as well the most natural way to proceed is to perturb the Riemannian metric in the manifold itself. But then, since a local perturbation of a Riemannian metric changes all geodesics through a neighborhood, the geodesic flow of the perturbed metric changes in tubular neighborhoods of vertical fibers in the unit tangent bundle. So local perturbations of the metric are not quite local for the geodesic flow, the usual strategy applied in generic dynamics of perturbing a flow in a flowbox without changing the dynamics outside the box does not work. This poses many interesting, technical problems in the theory of local perturbations of dynamical systems of geometric origin, the famous works of Klingenberg-Takens [40] and Anosov [3] (the bumpy metric theorem) about generic properties of closed geodesics are perhaps the two best known examples. Moreover, geodesics in general have many self-intersections so the effect of a local perturbation of the metric on the global

dynamics of perturbed orbits is unpredictable unless we know a priori that the geodesic flow enjoys some sort of stability (negative sectional curvatures, Anosov flows for instance).

The family of metric perturbations which preserves a compact piece of a given geodesic is the most used to study generic theory of periodic geodesics. This family of perturbations is relatively easy to characterize analytically when we restrict ourselves to the category of conformal perturbations or more generally, to the set of perturbations of Lagrangians by small potentials. Recall that a Riemannian metric h in a manifold M is conformally equivalent to a Riemannian metric g in M if there exists a positive, C^∞ function $b : M \longrightarrow \mathbb{R}$ such that $h_x(v, w) = b(x)g_x(v, w)$ for every $x \in M$ and $v, w \in T_xM$. Given a C^∞, Tonelli Lagrangian $L : TM \times TM \longrightarrow \mathbb{R}$ defined in a compact manifold M, and a C^∞ function $u : M \longrightarrow \mathbb{R}$, the function $L_u(p, v) = L(p, v) + u(p)$ gives another Tonelli Lagrangian. The function u is usually called a potential because of the analogy between this kind of Lagrangian and mechanical Lagrangians.

By Maupertuis principle (see for example [19]), the Lagrangian associated to a metric h in M that is conformally equivalent to g is of the form $L(p, v) = \frac{1}{2}g_p(v, v) + u(p)$ for some function u. Since the Lagrangian of a metric g is given by the formula $L_g(p, v) = \frac{1}{2}g_p(v, v)$, we get $L_h(p, v) = L_g(p, v) + u(p)$. Now, given a compact part $\gamma : [0, T] \longrightarrow M$ of a geodesic of (M, g), the collection of potentials $u : M \to \mathbb{R}$ such that $\gamma[0, T]$ is still a geodesic of $L(p, v) = L_g(p, v) + u(p)$ contains the functions whose gradients vanish along the subset of $T_{\gamma(t)}M$ which are perpendicular to $\gamma'(t)$ for every $t \in [0, T]$ (see for instance [65, Lemma 2.1]). Lagrangian perturbations of Tonelli Lagrangians of the type $L_h(p, v) = L_g(p, v) + u(p)$ were used extensively by R. Mañé to study generic properties of Tonelli Lagrangians and applications to Aubry-Mather theory (see for instance [49, 50]). Mañé's idea proved to be very fruitful and insightful in Lagrangian generic theory, and opened a new branch of generic theory that is usually called Mañé's genericity. Recently, Rifford-Ruggiero [62] gave a proof of Klingenberg-Takens and Anosov C^1 genericity results for closed geodesics using control theory techniques applied to the class of Mañé type perturbations of Lagrangians. Control theory ideas simplify a great deal the technical problems involved in metric perturbations and at the same time show that Mañé type perturbations attain full Hamiltonian genericity. This result, combined with a previous theorem by Oliveira [53] led to the Kupka-Smale Theorem for geodesic flows in the family of conformal perturbations of metrics.

These promissing applications of control theory to the generic theory of geodesic flows motivate us to study Frank's Lemma for conformal perturbations of Riemannian metrics or equivalently, for Mañé type perturbations of Riemannian Lagrangians. Before stating our main theorem, let us recall first some notations and basic results about geodesic flows. The geodesic flow of a Riemannian manifold

(M, g) will be denoted by ϕ_t, the flow acts on the unit tangent bundle T_1M, a point $\theta \in T_1M$ has canonical coordinates $\theta = (p, v)$ where $p \in M$, $v \in T_pM$, and γ_θ denotes the unit speed geodesic with initial conditions $\gamma_\theta(0) = p$, $\gamma'_\theta(0) = v$. Let $N_\theta \subset T_\theta T_1M$ be the plane of vectors which are perpendicular to the geodesic flow with respect to the Sasaki metric (see for example [66]). The collection of these planes is preserved by the action of the differential of the geodesic flow :$D_\theta\phi_t(N_\theta) = N_{\phi_t(\theta)}$ for every θ and $t \in \mathbb{R}$.

Let us consider a geodesic arc, of length T

$$\gamma_\theta : [0, T] \longrightarrow M,$$

and let Σ_0 and Σ_T be local transverse sections for the geodesic flow which are tangent to N_θ and $N_{\phi_T(\theta)}$ respectively. Let $\mathbb{P}_g(\Sigma_0, \Sigma_T, \gamma)$ be a Poincaré map going from Σ_0 to Σ_T. In horizontal-vertical coordinates of N_θ, the differential $D_\theta\phi_T$ that is the *linearized Poincaré map*

$$P_g(\gamma)(T) := D_\theta\mathbb{P}_g(\Sigma_0, \Sigma_T, \gamma)$$

is a symplectic endomorphism of $\mathbb{R}^{(2n-2)} \times \mathbb{R}^{(2n-2)}$. This endomorphism can be expressed in terms of the Jacobi fields of γ_θ which are perpendicular to $\gamma'_\theta(t)$ for every t :

$$P_g(\gamma)(T)(J(0), \dot{J}(0)) = (J(T), \dot{J}(T)),$$

where $\dot{J}$ denotes the covariant derivative along the geodesic. We can identify the set of all symplectic endomorphisms of $\mathbb{R}^{2n-2} \times \mathbb{R}^{2n-2}$ with the symplectic group

$$\mathrm{Sp}(n-1) := \Big\{X \in \mathbb{R}^{(2n-2)\times(2n-2)}; X^*\mathbb{J}X = \mathbb{J}\Big\},$$

where X^* denotes the transpose of X and

$$\mathbb{J} = \begin{bmatrix} 0 & I_{n-1} \\ -I_{n-1} & 0 \end{bmatrix}.$$

Given a geodesic $\gamma_\theta : [0, T] \to M$, an interval $[t_1, t_2] \subset [0, T]$ and $\rho > 0$, we denote by $\mathcal{C}_g\left(\gamma_\theta\big([t_1, t_2]\big); \rho\right)$ the open geodesic cylinder along $\gamma_\theta\big([t_1, t_2]\big)$ of radius ρ, that is the open set defined by

$$\mathcal{C}_g\left(\gamma_\theta\big([t_1, t_2]\big); \rho\right) :=$$
$$\Big\{p \in M \mid \exists t \in (t_1, t_2) \text{ with } d_g\big(p, \gamma_\theta(t)\big) < \rho \text{ and } d_g\big(p, \gamma_\theta([t_1, t_2])\big) = d_g\big(p, \gamma_\theta(t)\big)\Big\},$$

where d_g denotes the geodesic distance with respect to g. Our main result is the following.

Theorem 4.1.1 (Franks' Lemma) *Let (M, g) be a smooth compact Riemannian manifold of dimension ≥ 2. For every $T > 0$ there exist $\delta_T, \tau_T, K_T > 0$ such that the following property holds :*
For every geodesic $\gamma_\theta : [0, T] \to M$, there are $\bar{t} \in [0, T - \tau_T]$ and $\bar{\rho} > 0$ with

$$\mathcal{C}_g\Big(\gamma_\theta\left(\left[\bar{t}, \bar{t} + \tau_T\right]\right); \bar{\rho}\Big) \cap \gamma_\theta([0, T]) = \gamma_\theta\left(\left(\bar{t}, \bar{t} + \tau_T\right)\right),$$

such that for every $\delta \in (0, \delta_T)$, for each symplectic map A in the open ball (in $Sp(n-1)$) centered at $P_g(\gamma)(T)$ of radius δ and for every $\rho \in (0, \bar{\rho})$, there exists a C^∞ metric h in M that is conformal to g, $h_p(v, w) = (1 + \sigma(p))g_p(v, w)$, such that :

1. *the geodesic $\gamma_\theta : [0, T] \longrightarrow M$ is still a geodesic of (M, h),*
2. *$Supp(\sigma) \subset \mathcal{C}_g\left(\gamma_\theta\left(\left[\bar{t}, \bar{t} + \tau_T\right]\right); \rho\right)$,*
3. *$P_h(\gamma_\theta)(T) = A$,*
4. *the C^2 norm of the function σ is less than $K_T\sqrt{\delta}$.*

Theorem 4.1.1 improves a previous result by Contreras [12, Theorem 7.1] which gives a controllability result at first order under an additional assumption on the curvatures along the initial geodesic. Other proofs of Contreras Theorem can also be found in [78] and [42]. The Lazrag proof follows already the ideas from geometric control introduced in [62] to study controllability properties at first order. Our new Theorem 4.1.1 shows that controllability holds at second order without any assumption on curvatures along the geodesic. Its proof amounts to study how small conformal perturbations of the metric g along $\Gamma := \gamma([0, T])$ affect the differential of $\mathbb{P}_g(\Sigma_0, \Sigma_T, \gamma)$. This can be seen as a problem of local controllability along a reference trajectory in the symplectic group. As in [62], The idea is to see the Hessian of the conformal factor along the initial geodesic as a control and to obtain Theorem 4.1.1 as a uniform controllability result at second order for a control system of the form

$$\dot{X}(t) = A(t)X(t) + \sum_{i=1}^{k} u_i(t)B_iX(t), \qquad \text{for a.e.} \quad t,$$

in the symplectic group $\mathrm{Sp}(n-1)$.

We apply Franks' Lemma to extend some results concerning the characterization of hyperbolic geodesic flows in terms of the persistence of some C^1 generic properties of the dynamics. These results are based on well known steps towards the proof of the C^1 structural stability conjecture for diffeomorphisms.

Let us first introduce some notations. Given a smooth compact Riemannian manifold (M, g), we say that a property P of the geodesic flow of (M, g) is ϵ-C^k-persistent from Mañé's viewpoint if for every C^∞ function $f : M \longrightarrow \mathbb{R}$ whose C^k

norm is less than ϵ we have that the geodesic flow of the metric $(M,(1+f)g)$ has property P as well. By Maupertuis' principle, this is equivalent to the existence of an open C^k-ball of radius $\epsilon' > 0$ of functions $q : M \longrightarrow \mathbb{R}$ such that for every C^∞ function in this open ball the Euler-Lagrange flow of the Lagrangian $L(p,v) = \frac{1}{2}g_p(v,v) - q(p)$ in the level of energy equal to 1 has property P. This definition is inspired by the definition of C^{k-1} persistence for diffeomorphisms : a property P of a diffeomorphism $f : M \longrightarrow M$ is called ϵ-C^{k-1} persistent if the property holds for every diffeomorphism in the ϵ-C^{k-1} neighborhood of f. It is clear that if a property P is ϵ-C^1 persistent for a geodesic flow then the property P is ϵ'-C^2 persistent from Mañé's viewpoint for some ϵ'.

Theorem 4.1.2 *Let (M,g) be a smooth compact Riemannian manifold of dimension ≥ 2 such that the periodic orbits of the geodesic flow are C^2-persistently hyperbolic from Mañé's viewpoint. Then the closure of the set of periodic orbits of the geodesic flow is a hyperbolic set.*

An interesting application of Theorem 4.1.2 is the following extension of Theorem A in [64] : C^1 persistently expansive geodesic flows in the set of Hamiltonian flows of T_1M are Anosov flows. We recall that a non-singular smooth flow $\phi_t : Q \longrightarrow Q$ acting on a complete Riemannian manifold Q is *ϵ-expansive* if given $x \in Q$ we have that for each $y \in Q$ such that there exists a continuous surjective function $\rho : \mathbb{R} \longrightarrow \mathbb{R}$ with $\rho(0) = 0$ satisfying

$$d\left(\phi_t(x), \phi_{\rho(t)}(y)\right) \leq \epsilon \qquad \forall t \in \mathbb{R},$$

then there exists $t(y)$, $\mid t(y) \mid < \epsilon$ such that $\phi_{t(y)}(x) = y$. A smooth non-singular flow is called expansive if it is expansive for some $\epsilon > 0$. Anosov flows are expansive, and it is not difficult to get examples which show that the converse of this statement is not true. Theorem 4.1.2 yields the following.

Theorem 4.1.3 *Let (M,g) be a smooth compact Riemannian manifold, suppose that either M is a surface or $\dim M \geq 3$ and (M,g) has no conjugate points. Assume that the geodesic flow is C^2 persistently expansive from Mañé's viewpoint, then the geodesic flow is Anosov.*

The proof of the above result requires the set of periodic orbits to be dense. Such a result follows from expansiveness on surfaces [64] and from the absence of conjugate points in any dimension. If we drop the assumption of the absence of conjugate points we do not know whether periodic orbits of expansive geodesic flows are dense (and so if the geodesic flow in Theorem 4.1.3 is Anosov). This is a difficult,

challenging problem.

The chapter is organized as follows. In the next section, we introduce some preliminaries which describe the relationship between local controllability and some properties of the End-Point mapping and we introduce the notions of local controllability at first and second order. We recall a result of controllability at first order (Proposition 4.2.1) already used in [62] and state results (Propositions 4.2.2 and 4.2.4) at second order whose long and technical proofs are given in Sections 4.2.5 and 4.2.6. In Section 4.3, we provide the proof of Theorem 4.1.1 and the proof of theorems 4.1.2, 4.1.3 are given in Section 4.4.

4.2 Preliminaries in control theory

Our aim here is to provide sufficient conditions for first and second order local controllability results. This kind of results could be developed for nonlinear control systems on smooth manifolds. For sake of simplicity, we restrict our attention here to the case of affine control systems on the set of (symplectic) matrices. We refer the interested reader to [1, 16, 44, 38, 61] for a further study in control theory.

4.2.1 The End-Point mapping

Let us a consider a *bilinear control system* on $M_{2m}(\mathbb{R})$ (with $m, k \geq 1$), of the form

$$\dot{X}(t) = A(t)X(t) + \sum_{i=1}^{k} u_i(t)B_iX(t), \qquad \text{for a.e.} \quad t, \tag{4.1}$$

where the *state* $X(t)$ belongs to $M_{2m}(\mathbb{R})$, the *control* $u(t)$ belongs to $\mathbb{R}^k$, $t \in [0,T] \mapsto A(t)$ (with $T > 0$) is a smooth map valued in $M_{2m}(\mathbb{R})$, and $B_1, \ldots, B_k$ are k matrices in $M_{2m}(\mathbb{R})$. Given $\bar{X} \in M_{2m}(\mathbb{R})$ and $\bar{u} \in L^2\big([0,T];\mathbb{R}^k\big)$, the Cauchy problem

$$\dot{X}(t) = A(t)X(t) + \sum_{i=1}^{k} \bar{u}_i(t)B_iX(t) \quad \text{for a.e.} \quad t \in [0,T], \qquad X(0) = \bar{X}, \tag{4.2}$$

possesses a unique solution $X_{\bar{X},\bar{u}}(\cdot)$. The *End-Point mapping* associated with $\bar{X}$ in time $T > 0$ is defined as

$$\begin{array}{rcl} E^{\bar{X},T} \,:\, L^2\big([0,T];\mathbb{R}^k\big) & \longrightarrow & M_{2m}(\mathbb{R}) \\ u & \longmapsto & X_{\bar{X},u}(T). \end{array}$$

It is a smooth mapping whose differential can be expressed in terms of the linearized control system (see [61]). Given $\bar{X} \in M_{2m}(\mathbb{R})$, $\bar{u} \in L^2\big([0,T];\mathbb{R}^k\big)$, and setting $\bar{X}(\cdot) := X_{\bar{X},\bar{u}}(\cdot)$, the differential of $E^{\bar{X}}$ at $\bar{u}$ is given by the linear operator

$$\begin{array}{rccc} D_{\bar{u}}E^{\bar{X},T} \ : & L^2\big([0,T];\mathbb{R}^k\big) & \longrightarrow & M_{2m}(\mathbb{R}) \\ & v & \longmapsto & Y(T), \end{array}$$

where $Y(\cdot)$ is the unique solution to the linearized Cauchy problem

$$\begin{cases} \dot{Y}(t) = A(t)Y(t) + \sum_{i=1}^k v_i(t)B_i(t)\bar{X}(t) & \text{for a.e.} \quad t \in [0,T], \\ Y(0) = 0. \end{cases}$$

Note that if we denote by $S(\cdot)$ the solution to the Cauchy problem

$$\begin{cases} \dot{S}(t) = A(t)S(t) \\ S(0) = I_{2m} \end{cases} \qquad \forall t \in [0,T], \tag{4.3}$$

then there holds

$$D_{\bar{u}}E^{\bar{X},T}(v) = \sum_{i=1}^k S(T)\int_0^T v_i(t)S(t)^{-1}B_i\bar{X}(t)\,dt, \tag{4.4}$$

for every $v \in L^2([0,T];\mathbb{R}^k)$.

Let $\mathrm{Sp}(m)$ be the symplectic group in $M_{2m}(\mathbb{R})$ ($m \geq 1$), that is the smooth submanifold of matrices $X \in M_{2m}(\mathbb{R})$ satisfying

$$X^*\mathbb{J}X = \mathbb{J} \quad \text{ where } \mathbb{J} := \begin{bmatrix} 0 & I_m \\ -I_m & 0 \end{bmatrix}.$$

Denote by $\mathcal{S}(2m)$ the set of symmetric matrices in $M_{2m}(\mathbb{R})$. The tangent space to $\mathrm{Sp}(m)$ at the identity matrix is given by

$$T_{I_{2m}}\mathrm{Sp}(m) = \Big\{Y \in M_{2m}(\mathbb{R}) \,|\, \mathbb{J}Y \in \mathcal{S}(2m)\Big\}.$$

Therefore, if there holds

$$\mathbb{J}A(t),\, \mathbb{J}B_1,\, \ldots,\, \mathbb{J}B_k \in \mathcal{S}(2m) \qquad \forall t \in [0,T], \tag{4.5}$$

then $\mathrm{Sp}(m)$ is invariant with respect to (4.1), that is for every $\bar{X} \in \mathrm{Sp}(m)$ and $\bar{u} \in L^2\big([0,T];\mathbb{R}^k\big)$,

$$X_{\bar{X},u}(t) \in \mathrm{Sp}(m) \qquad \forall t \in [0,T].$$

In particular, this means that for every $\bar{X} \in \mathrm{Sp}(m)$, the End-Point mapping $E^{\bar{X},T}$ is valued in $\mathrm{Sp}(m)$. Given $\bar{X} \in \mathrm{Sp}(m)$ and $\bar{u} \in L^2\big([0,T];\mathbb{R}^k\big)$, we are interested in local controllability properties of (4.1) around $\bar{u}$. The control system (4.1) is called *controllable around* $\bar{u}$ in $\mathrm{Sp}(m)$ (in time T) if for every final state $X \in \mathrm{Sp}(m)$ close to $X_{\bar{X},\bar{u}}(T)$ there is a control $u \in L^2\big([0,T];\mathbb{R}^k\big)$ which steers $\bar{X}$ to X, that is such that $E^{\bar{X},T}(u) = X$. Such a property is satisfied as soon as $E^{\bar{X},T}$ is locally open at $\bar{u}$. Our aim in the next sections is to give an estimate from above on the size of $\|u\|_{L^2}$ in terms of $\|X - X_{\bar{X},u}(T)\|$.

4.2.2 First order controllability results

Given $T > 0$, $\bar{X} \in \mathrm{Sp}(m)$, a mapping $t \in [0,T] \mapsto A(t) \in M_{2m}(\mathbb{R})$, k matrices $B_1, \dots, B_k \in M_{2m}(\mathbb{R})$ satisfying (4.5), and $\bar{u} \in L^2\big([0,T];\mathbb{R}^k\big)$, we say that the control system (4.1) is *controllable at first order around* $\bar{u}$ in $\mathrm{Sp}(m)$ if the mapping $E^{\bar{X},T} : L^2\big([0,T];\mathbb{R}^k\big) \to \mathrm{Sp}(m)$ is a *submersion* at $\bar{u}$, that is if the linear operator

$$D_{\bar{u}}E^{\bar{X},T} \,:\, L^2\big([0,T];\mathbb{R}^k\big) \longrightarrow T_{\bar{X}(T)}\mathrm{Sp}(m),$$

is surjective (with $\bar{X}(T) := X_{\bar{X},\bar{u}}(T)$). The following sufficient condition for first order controllability is given in [62, Proposition 2.1] (see also [42, 44]).

Proposition 4.2.1 *Let $T > 0$, $t \in [0,T] \mapsto A(t)$ a smooth mapping and $B_1, \dots, B_k \in M_{2m}(\mathbb{R})$ be matrices in $M_{2m}(\mathbb{R})$ satisfying (4.5). Define the k sequences of smooth mappings*

$$\{B_1^j\}, \dots, \{B_k^j\} : [0,T] \to T_{I_{2m}}Sp(m)$$

by

$$\begin{cases} B_i^0(t) := B_i \\ B_i^j(t) := \dot{B}_i^{j-1}(t) + B_i^{j-1}(t)A(t) - A(t)B_i^{j-1}(t), \end{cases} \tag{4.6}$$

for every $t \in [0,T]$ and every $i \in \{1,\dots,k\}$. Assume that there exists some $\bar{t} \in [0,T]$ such that

$$Span\Big\{B_i^j(\bar{t}) \,|\, i \in \{1,\dots,k\}, j \in \mathbb{N}\Big\} = T_{I_{2m}}Sp(m). \tag{4.7}$$

Then for every $\bar{X} \in Sp(m)$, the control system (4.1) is controllable at first order around $\bar{u} \equiv 0$.

The control system which is relevant in the present paper is not always controllable at first order. We need sufficient condition for controllability at second order.

4.2.3 Second-order controllability results

Using the same notations as above, we say that the control system (4.1) is *controllable at second order around* $\bar{u}$ in $\mathrm{Sp}(m)$ if there are $\mu, K > 0$ such that for every $X \in B\Big(\bar{X}(T), \mu\Big) \cap \mathrm{Sp}(m)$, there is $u \in L^2\big([0,T];\mathbb{R}^k\big)$ satisfying

$$E^{\bar{X},T}(u) = X \quad \text{and} \quad \|u\|_{L^2} \leq K \left|X - \bar{X}(T)\right|^{1/2}.$$

Obtaining such a property requires a study of the End-Point mapping at second order. Recall that given two matrices $B, B' \in M_{2m}(\mathbb{R})$, the bracket $[B, B']$ is the matrix of $M_{2m}(\mathbb{R})$ defined as

$$[B, B'] := BB' - B'B.$$

The following results are the key points in the proof of our main theorem. Their proofs will be given respectively in Sections 4.2.5 and 4.2.6.

Proposition 4.2.2 *Let $T > 0$, $t \in [0,T] \mapsto A(t)$ a smooth mapping and $B_1, \ldots, B_k \in M_{2m}(\mathbb{R})$ be matrices in $M_{2m}(\mathbb{R})$ satisfying (4.5) such that*

$$B_i B_j = 0 \qquad \forall i, j = 1, \ldots, k. \tag{4.8}$$

Define the k sequences of smooth mappings $\{B_1^j\}, \ldots, \{B_k^j\} : [0,T] \to T_{I_{2m}} Sp(m)$ by (4.6) and assume that the following properties are satisfied with $\bar{t} = 0$:

$$\big[B_i^j(\bar{t}), B_i\big] \in Span\Big\{B_r^s(\bar{t}) \,|\, r = 1, .., k,\ s \geq 0\Big\} \qquad \forall i = 1, \ldots, k,\ \forall j = 1, 2, \tag{4.9}$$

and

$$Span\Big\{B_i^j(\bar{t}), [B_i^1(\bar{t}), B_l^1(\bar{t})] \,|\, i, l = 1, .., k \text{ and } j = 0, 1, 2\Big\} = T_{I_{2m}} Sp(m). \tag{4.10}$$

Then, for every $\bar{X} \in Sp(m)$, the control system (4.1) is controllable at second order around $\bar{u} \equiv 0$.

Remark 4.2.3 *For sake of simplicity we restrict here our attention to control systems of the form (4.1) satisfying (4.8)-(4.9). More general results can be found in [44].*

To prove Theorem 4.1.1, we will need the following parametrized version of Proposition 4.2.2 which will follow from the fact that smooth controls with support in $(0,T)$ are dense in $L^2([0,T];\mathbb{R}^k)$ and compactness.

Proposition 4.2.4 *Let $T > 0$, and for every θ in some set of parameters Θ let $t \in [0,T] \mapsto A^\theta(t)$ be a smooth mapping and $B_1^\theta, \dots, B_k^\theta \in M_{2m}(\mathbb{R})$ be matrices in $M_{2m}(\mathbb{R})$ satisfying (4.5) (with $A(t) = A^\theta$) such that*

$$B_i^\theta B_j^\theta = 0 \qquad \forall i,j = 1,\dots,k. \tag{4.11}$$

Define for every $\theta \in \Theta$ the k sequences of smooth mappings $\{B_1^{\theta,j}\}, \dots, \{B_k^{\theta,j}\} : [0,T] \to T_{I_{2m}}Sp(m)$ as in (4.6) and assume that the following properties are satisfied with $\bar{t} = 0$ for every $\theta \in \Theta$:

$$\left[B_i^{\theta,j}(\bar{t}), B_i^\theta\right] \in Span\Big\{B_r^{\theta,s}(\bar{t}) \,|\, r = 1,..,k,\ s \geq 0\Big\} \quad \forall i = 1,\dots,k,\ \forall j = 1,2 \tag{4.12}$$

and

$$Span\Big\{B_i^{\theta,j}(\bar{t}), [B_i^{\theta,1}(\bar{t}), B_l^{\theta,1}(\bar{t})] \,|\, i,l = 1,..,k \,and\, j = 0,1,2\Big\} = T_{I_{2m}}Sp(m). \tag{4.13}$$

Assume moreover, that the sets

$$\Big\{B_i^\theta \,|\, i = 1,\dots,k,\ \theta \in \Theta\Big\} \subset M_{2m}(\mathbb{R})$$

and

$$\Big\{t \in [0,T] \mapsto A^\theta(t) \,|\, \theta \in \Theta\Big\} \subset C^2\big([0,T]; M_{2m}(\mathbb{R})\big)$$

are compact. Then, there are $\mu, K > 0$ such that for every $\theta \in \Theta$, every $\bar{X} \in Sp(m)$ and every $X \in B\Big(\bar{X}^\theta(T), \mu\Big) \cap Sp(m)$ ($\bar{X}^\theta(T)$ denotes the solution at time T of the control system (4.1) with parameter θ starting from $\bar{X}$), there is $u \in C^\infty\big([0,T]; \mathbb{R}^k\big)$ with support in $[0,T]$ satisfying

$$E_\theta^{\bar{X},T}(u) = X \quad and \quad \|u\|_{C^2} \leq K\left|X - \bar{X}(T)\right|^{1/2}$$

($E_\theta^{\bar{X},T}$ denotes the End-Point mapping associated with the control system (4.1) with parameter θ).

Our proof is based on a series of results on openness properties of C^2 mappings near critical points in Banach spaces which was developed by Agrachev and his co-authors, see [1].

4.2.4 Some sufficient condition for local openness

Here we are interested in the study of mappings $F : \mathcal{U} \to \mathbb{R}^N$ of class C^2 in an open set $\mathcal{U}$ in some Banach space X. We call critical point of F any $u \in \mathcal{U}$ such that $D_uF : \mathcal{U} \to \mathbb{R}^N$ is not surjective. We call corank of u, the quantity

$$\text{corank}(u) := N - \dim\left(\text{Im}\big(D_uF\big)\right).$$

If $Q : \mathcal{U} \to \mathbb{R}$ is a quadratic form, its negative index is defined by

$$\mathrm{ind}_-(Q) := \max\Big\{\dim(L) \mid Q_{|L\setminus\{0\}} < 0\Big\}.$$

The following non-quantitative result whose proof can be found in [1, 44, 61] provides a sufficient condition at second order for local openness.

Theorem 4.2.5 *Let $F : \mathcal{U} \to \mathbb{R}^N$ be a mapping of class C^2 on an open set $\mathcal{U} \subset X$ and $\bar{u} \in \mathcal{U}$ be a critical point of F of corank r. If*

$$ind_-\left(\lambda^*\left(D^2_{\bar{u}}F\right)_{|Ker(D_{\bar{u}}F)}\right) \geq r \qquad \forall \lambda \in \big(Im\big(D_{\bar{u}}F\big)\big)^{\perp} \setminus \{0\}, \tag{4.14}$$

then the mapping F is locally open at $\bar{u}$, that is the image of any neighborhood of $\bar{u}$ is an neighborhood of $F(\bar{u})$.

In the above statement, $(D^2_{\bar{u}}F)_{|\mathrm{Ker}(D_{\bar{u}}F)}$ refers to the quadratic mapping from $\mathrm{Ker}(D_{\bar{u}}F)$ to $\mathbb{R}^N$ defined by

$$\big(D^2_{\bar{u}}F\big)_{|\mathrm{Ker}(D_{\bar{u}}F)}(v) := D^2_{\bar{u}}F \cdot (v, v) \qquad \forall v \in \mathrm{Ker}(D_{\bar{u}}F).$$

The following result is a quantitative version of the previous theorem. (We denote by $B_X(\cdot,\cdot)$ the balls in X with respect to the norm $\|\cdot\|_X$.)

Theorem 4.2.6 *Let $F : \mathcal{U} \to \mathbb{R}^N$ be a mapping of class C^2 on an open set $\mathcal{U} \subset X$ and $\bar{u} \in \mathcal{U}$ be a critical point of F of corank r. Assume that (4.14) holds. Then there exist $\bar{\epsilon}, c \in (0,1)$ such that for every $\epsilon \in (0,\bar{\epsilon})$ the following property holds : For every $u \in \mathcal{U}, z \in \mathbb{R}^N$ with*

$$\|u - \bar{u}\|_X < \epsilon, \quad |z - F(u)| < c\,\epsilon^2, \tag{4.15}$$

there are $w_1, w_2 \in X$ such that $u + w_1 + w_2 \in \mathcal{U}$,

$$z = F\big(u + w_1 + w_2\big), \tag{4.16}$$

and

$$w_1 \in Ker(D_uF)\,, \quad \big\|w_1\big\|_X < \epsilon, \quad \big\|w_2\big\|_X < \epsilon^2. \tag{4.17}$$

Again, the proof of Theorem 4.2.6 which follows from previous results by Agrachev-Sachkov [1] and Agrachev-Lee [2] can be found in [44, 61]. A parametric version of Theorem 4.2.6 that will be useful in the proof of Proposition 4.2.4 is provided in [44].

4.2.5 Proof of Proposition 4.2.2

Without loss of generality, we may assume that $\bar{X} = I_{2m}$. As a matter of fact, if $X_u : [0,T] \to \mathrm{Sp}(m) \subset M_{2m}(\mathbb{R})$ is solution to the Cauchy problem

$$\dot{X}_u(t) = A(t)X_u(t) + \sum_{i=1}^{k} u_i(t)B_iX_u(t) \text{ for a.e. } t \in [0,T], \quad X_u(0) = I_{2m}, \quad (4.18)$$

then for every $\bar{X} \in \mathrm{Sp}(m)$, the trajectory $\left(X_u\bar{X}\right) : [0,T] \to M_{2m}(\mathbb{R})$ starts at $\bar{X}$ and satisfies

$$\frac{d}{dt}\left(X_u(t)\bar{X}\right) = A(t)\left(X_u(t)\bar{X}\right) + \sum_{i=1}^{k} u_i(t)B_i\left(X_u(t)\bar{X}\right) \quad \text{for a.e.} \quad t \in [0,T].$$

So any trajectory of (4.1), that is any control, steering I_{2m} to some $X \in \mathrm{Sp}(m)$ gives rise to a trajectory, with the same control, steering $\bar{X} \in \mathrm{Sp}(m)$ to $X\bar{X} \in \mathrm{Sp}(m)$. Since right-translations in $\mathrm{Sp}(m)$ are diffeomorphisms, we infer that local controllability at second order around $\bar{u} \equiv 0$ from $\bar{X} = I_{2m}$ implies controllability at second order around $\bar{u} \equiv 0$ for any $\bar{X} \in \mathrm{Sp}(m)$. So from now we assume that $\bar{X} = I_{2m}$ (in the sequel we omit the lower index and simply write I). We recall that $\bar{X} : [0,T] \to \mathrm{Sp}(m) \subset M_{2m}(\mathbb{R})$ denotes the solution of (4.18) associated with $u = \bar{u} \equiv 0$ while $X_u : [0,T] \to \mathrm{Sp}(m) \subset M_{2m}(\mathbb{R})$ stands for a solution of (4.18) associated with some control $u \in L^2\big([0,T];\mathbb{R}^k\big)$. Furthermore, we may also assume that the End-Point mapping $E^{I,T} : L^2\big([0,T];\mathbb{R}^k\big) \to \mathrm{Sp}(m)$ is not a submersion at $\bar{u}$ because it would imply controllability at first order around $\bar{u}$ and so at second order, as desired.

We equip the vector space $M_{2m}(\mathbb{R})$ with the scalar product defined by

$$P \cdot Q = \mathrm{tr}\,(P^*Q) \qquad \forall P, Q \in M_{2m}(\mathbb{R}).$$

Let us fix $P \in T_{\bar{X}(T)}\mathrm{Sp}(m)$ such that P belongs to $\left(\mathrm{Im}\big(D_0E^{I,T}\big)\right)^{\perp} \setminus \{0\}$ with respect to our scalar product (note that $\left(\mathrm{Im}\big(D_0E^{I,T}\big)\right)^{\perp} \setminus \{0\}$ is nonempty since $D_0E^{I,T} : L^2\big([0,T];\mathbb{R}^k\big) \to T_{\bar{X}(T)}\mathrm{Sp}(m)$ is assumed to be not surjective).

Lemma 4.2.7 *For every $t \in [0,T]$, we have*

$$tr\Big[P^*S(T)S(t)^{-1}\,B_i^j(t)S(t)\Big] = 0 \qquad \forall j \geq 0, \forall i = 1, ..., k.$$

Proof of Lemma 4.2.7 : Recall (remember (4.4)) that for every $u \in L^2([0,T];\mathbb{R}^k)$,

$$D_0E^{I,T}(u) = S(T)\int_0^T S(t)^{-1}\sum_{i=1}^{k} u_i(t)B_i\bar{X}(t)\,dt,$$

where $S(\cdot)$ denotes the solution of the Cauchy problem (4.3). Thus if P belongs to $\big(\mathrm{Im} D_0 E^{I,T}\big)^{\perp}$, we have

$$\mathrm{tr}\left[P^* S(T)\int_0^T S(t)^{-1}\sum_{i=1}^k u_i(t)B_i\bar{X}(t)\,dt\right]=0 \qquad \forall u\in L^1([0,T];\mathbb{R}^k).$$

This can be written as

$$\sum_{i=1}^k\int_0^T u_i(t)\,\mathrm{tr}\Big[P^*S(T)S(t)^{-1}B_iS(t)\Big]\,dt=0 \qquad \forall u\in L^1([0,T];\mathbb{R}^k).$$

We infer that

$$\mathrm{tr}\Big[P^*S(T)S(t)^{-1}B_iS(t)\Big]=0 \qquad \forall i\in\{1,\dots,k\},\ \forall t\in[0,T].$$

We conclude by noticing that

$$\frac{d^j}{dt^j}\big(S(t)^{-1}B_iS(t)\big)=S(t)^{-1}B_i^j(t)S(t) \qquad \forall t\in[0,T].$$

□

Let $u\in L^2\big([0,T];\mathbb{R}^k\big)$ be fixed, for every $\epsilon\in\mathbb{R}$ small we define $\delta_\epsilon:[0,T]\to M_{2m}(\mathbb{R})$ by

$$\delta_\epsilon(t):=E^{I,t}(\epsilon u) \qquad \forall t\in[0,T].$$

By regularity of the End-Point mapping (see [61]), we have formally for every $t\in[0,T]$,

$$\delta_\epsilon(t)=\bar{X}(t)+\delta_\epsilon^1(t)+\delta_\epsilon^2(t)+o(\epsilon^2),$$

where δ_ϵ^1 is linear in ϵ and δ_ϵ^2 quadratic. Then we have for every $t\in[0,T]$,

$$\begin{aligned}\delta_\epsilon(t) &= \bar{X}(t)+\delta_\epsilon^1(t)+\delta_\epsilon^2(t)+o(\epsilon^2)\\ &= I+\int_0^t A(s)\delta_\epsilon(s)+\sum_{i=1}^k\epsilon\,u_i(s)B_i\delta_\epsilon(s)\,ds\\ &= \bar{X}(t)+\int_0^t A(s)\delta_\epsilon^1(s)+\sum_{i=1}^k\epsilon\,u_i(s)B_i\bar{X}(s)\,ds\\ &\qquad +\int_0^t A(s)\delta_\epsilon^2(s)+\sum_{i=1}^k\epsilon\,u_i(s)B_i\delta_\epsilon^1(s)\,ds+o(\epsilon^2).\end{aligned}$$

Consequently, the second derivative of $E^{I,T}$ at 0 is given by the solution (times 2) at time T of the Cauchy problem

$$\begin{cases}\dot{Z}(t)=A(t)Z(t)+\sum_{i=1}^k u_i(t)B_iY(t),\\ Z(0)=0,\end{cases}$$

where $Y : [0,T] \to M_{2m}(\mathbb{R})$ is solution to the linearized Cauchy problem (4.3). Therefore we have

$$D_0^2 E^{I,T}(u) = 2S(T) \int_0^T S(t)^{-1} \sum_{i=1}^k u_i(t) B_i \varphi(t)\, dt,$$

where

$$\varphi(t) := \sum_{i=1}^k S(T) \int_0^T S(t)^{-1} u_i(t) B_i \bar{X}(t)\, dt.$$

Then we infer that for every $u \in L^2([0,T];\mathbb{R}^k)$,

$$P \cdot D_0^2 E^{I,T}(u) = \\ 2 \sum_{i,j=1}^k \int_0^T \int_0^t u_i(t) u_j(s) \mathrm{tr}\Big[P^* S(T) S(t)^{-1} B_i S(t) S(s)^{-1} B_j S(s)\Big]\, ds\, dt. \quad (4.19)$$

It is useful to work with an approximation of the quadratic form $P \cdot D_0^2 E^{I,T}$. For every $\delta > 0$, we see the space $L^2([0,\delta];\mathbb{R}^k)$ as a subspace of $L^2([0,T];\mathbb{R}^k)$ by the canonical immersion

$$u \in L^2([0,\delta];\mathbb{R}^k) \longmapsto \tilde{u} \in L^2([0,T];\mathbb{R}^k),$$

with

$$\tilde{u}(t) := \begin{cases} u(t) & \text{if } t \in [0,\delta] \\ 0 & \text{otherwise.} \end{cases} \qquad \text{for a.e. } t \in [0,T].$$

For sake of simplicity, we keep the same notation for $\tilde{u}$ and u.

Lemma 4.2.8 *There is $C > 0$ such that for every $\delta \in (0,T)$, we have*

$$\Big| P \cdot D_0^2 E^{I,T}(u) - Q_\delta(u) \Big| \le C\delta^4 \|u\|_{L^2}^2 \qquad \forall u \in L^2([0,\delta];\mathbb{R}^k) \subset L^2([0,T];\mathbb{R}^k),$$

where $Q_\delta : L^2([0,\delta];\mathbb{R}^k) \to \mathbb{R}$ is defined by

$$Q_\delta(u) := 2 \sum_{i,j=1}^k \int_0^\delta \int_0^t u_i(t) u_j(s) \mathcal{P}_{i,j}(t,s)\, ds\, dt \qquad \forall u \in L^2([0,\delta];\mathbb{R}^k),$$

with

$$\mathcal{P}_{i,j}(t,s) = tr\Bigg[P^* S(T) \Bigg(s B_i B_j^1(0) + t B_i^1(0) B_j + \frac{s^2}{2} B_i B_j^2(0) \\ + \frac{t^2}{2} B_i^2(0) B_j + ts B_i^1(0) B_j^1(0) \Bigg)\Bigg],$$

for any $t, s \in [0,T]$.

Proof of Lemma 4.2.8 : Setting for every $i, j = 1, \dots, k$,

$$\mathcal{B}_i(t) := B_i + t\, B_i^1(0) + \frac{t^2}{2}\, B_i^2(0) \qquad \forall t \in [0, T]$$

and using (4.8), we check that for any $t, s \in [0, T]$,

$$\mathcal{B}_i(t)\mathcal{B}_j(s) = \mathcal{P}_{i,j}(t, s) + \Delta_{i,j}(t, s),$$

with

$$\Delta_{i,j}(t, s) := \frac{t^2 s}{2}\, B_i^2(0)B_j^1(0) + \frac{ts^2}{2}\, B_i^1(0)B_j^2(0) + \frac{t^2 s^2}{4}\, B_i^2(0)B_j^2(0).$$

Moreover, remembering that

$$\frac{d^j}{dt^j}\left(S(t)^{-1}B_i S(t)\right) = S(t)^{-1}B_i^j(t)S(t) \qquad \forall t \in [0, T],$$

we have

$$S(t)^{-1}B_i S(t) = \mathcal{B}_i(t) + O\big(t^3\big).$$

Then by (4.19) we infer that for any $\delta \in (0, T)$ and any $u \in L^2([0, \delta]; \mathbb{R}^k)$,

$$\begin{aligned}
& P \cdot D_0^2 E^{I,T}(u) - Q_\delta(u) \\
= \;& 2\sum_{i,j=1}^{k} \int_0^\delta \int_0^t u_i(t)u_j(s)\mathrm{tr}\Big[P^* S(T)\left(\mathcal{B}_i(t) + O\big(t^3\big)\right)\left(\mathcal{B}_j(s) + O\big(s^3\big)\right) \\
& \qquad\qquad\qquad\qquad\qquad\qquad\qquad\qquad -\mathcal{P}_{i,j}(t, s)\Big]\, ds\, dt \\
= \;& 2\sum_{i,j=1}^{k} \int_0^\delta \int_0^t u_i(t)u_j(s)\mathrm{tr}\Big[P^* S(T)\Big(O\big(t^3\big)B_j(s) + B_i(t)O\big(s^3\big) + O\big(t^3\big)O\big(s^3\big) \\
& \qquad\qquad\qquad\qquad\qquad\qquad\qquad\qquad +\Delta_{i,j}(t, s)\Big)\Big]\, ds\, dt.
\end{aligned}$$

But for every nonnegative integers p, q with $p + q \geq 3$, we have

$$\begin{aligned}
& \left|\sum_{i,j=1}^{k} \int_0^\delta \int_0^t u_i(t)u_j(s)t^p s^q\, ds\, dt\right| \\
= \;& \left|\int_0^\delta \left(\sum_{i=1}^{k} u_i(t)t^p\right)\left(\int_0^t \sum_{j=1}^{k} u_j(s))s^q\, ds\right)\, dt\right| \\
\leq \;& \int_0^\delta \left(\sum_{i=1}^{k} |u_i(t)|\, t^p\right)\left(\int_0^t \sum_{j=1}^{k} |u_j(s)|\, s^q\, ds\right)\, dt \\
\leq \;& \int_0^\delta \left(\sum_{i=1}^{k} |u_i(t)|\, t^{p+q}\right)\left(\int_0^t \sum_{j=1}^{k} |u_j(s)|\, ds\right)\, dt,
\end{aligned}$$

which by Cauchy-Schwarz inequality yields

$$\begin{aligned}
&\left|\sum_{i,j=1}^{k}\int_0^\delta\int_0^t u_i(t)u_j(s)t^p s^q\,ds\,dt\right| \\
\leq\ & \sqrt{\int_0^\delta\left(\sum_{i=1}^{k}|u_i(t)|\,t^{p+q}\right)^2 dt}\sqrt{\int_0^\delta\left(\int_0^t\sum_{j=1}^{k}|u_j(s)|\,ds\right)^2 dt} \\
\leq\ & \sqrt{k\int_0^\delta t^{2(p+q)}\sum_{i=1}^{k}|u_i(t)|^2\,dt}\sqrt{\int_0^\delta t\int_0^t\left(\sum_{j=1}^{k}|u_j(s)|\right)^2 ds\,dt} \\
\leq\ & \sqrt{k\delta^{2(p+q)}\int_0^\delta\sum_{i=1}^{k}|u_i(t)|^2\,dt}\sqrt{\int_0^\delta t\int_0^\delta\left(\sum_{j=1}^{k}|u_j(s)|\right)^2 ds\,dt} \\
\leq\ & \sqrt{k}\,\delta^3\|u\|_{L^2}\sqrt{k\|u\|_{L^2}^2\int_0^\delta t\,dt} = \frac{k}{\sqrt{2}}\,\delta^4\|u\|_{L^2}^2.
\end{aligned}$$

We conclude easily. □

Returning to the proof of Proposition 4.2.2, we now want to show that the assumption (4.14) of Theorems 4.2.5-4.2.6 is satisfied. We are indeed going to show that a stronger property holds, namely that the index of the quadratic form in (4.14) goes to infinity as δ tends to zero.

Lemma 4.2.9 *For every integer $N > 0$, there are $\delta > 0$ and a subspace $L_\delta \subset L^2\big([0,\delta];\mathbb{R}^k\big)$ of dimension larger than N such that the restriction of Q_δ to L_δ satisfies*

$$Q_\delta(u) \leq -2C\|u\|_{L^2}^2\delta^4 \qquad \forall u \in L_\delta.$$

Proof of Lemma 4.2.9 : Using the notation

$$h_1 \odot h_2 = h_1(t) \odot h_2(s) := \int_0^\delta\int_0^t h_1(t)h_2(s)\,ds\,dt,$$

for any pair of continuous functions $h_1, h_2 : [0,\delta] \to \mathbb{R}$, we check that for every

$u \in L^2\big([0,\delta];\mathbb{R}^k\big)$,

$$\begin{aligned}\frac{1}{2}\,Q_\delta(u) \;=\; & \sum_{i,j=1}^{k} (u_i \odot (su_j))\ \mathrm{tr}\Big[P^*S(T)B_iB_j^1(0)\Big] \\ & + \sum_{i,j=1}^{k} ((tu_i)\odot u_j)\ \mathrm{tr}\Big[P^*S(T)B_i^1(0)B_j\Big] \\ & + \sum_{i,j=1}^{k} \left(u_i \odot \left(\frac{s^2u_j}{2}\right)\right)\ \mathrm{tr}\Big[P^*S(T)B_iB_j^2(0)\Big] \\ & + \sum_{i,j=1}^{k} \left(\left(\frac{t^2u_i}{2}\right)\odot u_j\right)\ \mathrm{tr}\Big[P^*S(T)B_i^2(0)B_j\Big] \\ & + \sum_{i,j=1}^{k} ((tu_i)\odot (su_j))\ \mathrm{tr}\Big[P^*S(T)B_i^1(0)B_j^1(0)\Big].\end{aligned} \tag{4.20}$$

Fix $\bar{i},\bar{j} \in \{1,\dots,k\}$ with $\bar{i} \neq \bar{j}$ and take $v = \big(v_1,\dots,v_k\big) \in L^2([0,\delta];\mathbb{R}^k)$ such that

$$v_i(t) = 0 \quad \forall t \in [0,\delta],\ \forall i \in \{1,\dots,k\} \setminus \{\bar{i},\bar{j}\}.$$

The sum of the first two terms in the right-hand side of (4.20) is given by

$$\begin{aligned}&\sum_{i,j=1}^{k} \Big\{(v_i \odot (sv_j))\ \mathrm{tr}\Big[P^*S(T)B_iB_j^1(0)\Big] + ((tv_i)\odot v_j)\,\mathrm{tr}\Big[P^*S(T)B_i^1(0)B_j\Big]\Big\} \\ &\quad = \big(v_{\bar{i}} \odot (sv_{\bar{j}})\big)\ \mathrm{tr}\Big[P^*S(T)B_{\bar{i}}B_{\bar{j}}^1(0)\Big] + \big(v_{\bar{j}} \odot (sv_{\bar{i}})\big)\ \mathrm{tr}\Big[P^*S(T)B_{\bar{j}}B_{\bar{i}}^1(0)\Big] \\ &\quad + (v_{\bar{i}} \odot (sv_{\bar{i}}))\ \mathrm{tr}\Big[P^*S(T)B_{\bar{i}}B_{\bar{i}}^1(0)\Big] + \big(v_{\bar{j}} \odot (sv_{\bar{j}})\big)\ \mathrm{tr}\Big[P^*S(T)B_{\bar{j}}B_{\bar{j}}^1(0)\Big] \\ &\quad + \big((tv_{\bar{i}})\odot v_{\bar{j}}\big)\ \mathrm{tr}\Big[P^*S(T)B_{\bar{i}}^1(0)B_{\bar{j}}\Big] + \big((tv_{\bar{j}})\odot v_{\bar{i}}\big)\ \mathrm{tr}\Big[P^*S(T)B_{\bar{j}}^1(0)B_{\bar{i}}\Big] \\ &\quad + ((tv_{\bar{i}})\odot v_{\bar{i}})\ \mathrm{tr}\Big[P^*S(T)B_{\bar{i}}^1(0)B_{\bar{i}}\Big] + \big((tv_{\bar{j}})\odot v_{\bar{j}}\big)\ \mathrm{tr}\Big[P^*S(T)B_{\bar{j}}^1(0)B_{\bar{j}}\Big].\end{aligned}$$

By integration by parts, we have

$$v_{\bar{i}} \odot (sv_{\bar{i}}) = \left(\int_0^\delta v_{\bar{i}}(s)\,ds\right)\left(\int_0^\delta sv_{\bar{i}}(s)\,ds\right) - (tv_{\bar{i}})\odot v_{\bar{i}}).$$

So

$$\begin{aligned}&(v_{\bar{i}} \odot (sv_{\bar{i}}))\ \mathrm{tr}\Big[P^*S(T)B_{\bar{i}}B_{\bar{i}}^1(0)\Big] + ((tv_{\bar{i}})\odot v_{\bar{i}})\ \mathrm{tr}\Big[P^*S(T)B_{\bar{i}}^1(0)B_{\bar{i}}\Big] \\ &\qquad = \left(\int_0^\delta v_{\bar{i}}(s)\,ds\right)\left(\int_0^\delta sv_{\bar{i}}(s)\,ds\right)\mathrm{tr}\Big[P^*S(T)B_{\bar{i}}B_{\bar{i}}^1(0)\Big] \\ &\qquad\qquad + (tv_{\bar{i}})\odot v_{\bar{i}})\mathrm{tr}\Big[P^*S(T)\,\big[B_{\bar{i}}^1(0),B_{\bar{i}}\big]\Big].\end{aligned}$$

But according to (4.9) with $i = \bar{i}$ (remember that $\bar{t} = 0$), we have

$$\big[B^1_{\bar{i}}(0), B_{\bar{i}}\big] \in \mathrm{Span}\Big\{B^s_r(0) \,|\, r = 1, .., k,\ s \geq 0\Big\},$$

then by Lemma 4.2.7 we obtain

$$\mathrm{tr}\Big[P^*S(T)\,\big[B^1_{\bar{i}}(0), B_{\bar{i}}\big]\Big] = 0,$$

and consequently,

$$\begin{aligned}(v_{\bar{i}} \odot (sv_{\bar{i}}))\ \mathrm{tr}\Big[P^*S(T)B_{\bar{i}}B^1_{\bar{i}}(0)\Big] + ((tv_{\bar{i}}) \odot v_{\bar{i}})\ \mathrm{tr}\Big[P^*S(T)B^1_{\bar{i}}(0)B_{\bar{i}}\Big]\\ = \left(\int_0^\delta v_{\bar{i}}(s)\,ds\right)\left(\int_0^\delta sv_{\bar{i}}(s)\,ds\right)\mathrm{tr}\Big[P^*S(T)B_{\bar{i}}B^1_{\bar{i}}(0)\Big].\end{aligned}$$

Similarly, we obtain

$$\begin{aligned}\big(v_{\bar{j}} \odot (sv_{\bar{j}})\big)\ \mathrm{tr}\Big[P^*S(T)B_{\bar{j}}B^1_{\bar{j}}(0)\Big] + \big((tv_{\bar{j}}) \odot v_{\bar{j}}\big)\ \mathrm{tr}\Big[P^*S(T)B^1_{\bar{j}}(0)B_{\bar{j}}\Big]\\ = \left(\int_0^\delta v_{\bar{j}}(s)\,ds\right)\left(\int_0^\delta sv_{\bar{j}}(s)\,ds\right)\mathrm{tr}\Big[P^*S(T)B_{\bar{j}}B^1_{\bar{j}}(0)\Big].\end{aligned}$$

In conclusion, the sum of the first two terms in the right-hand side of (4.20) can be written as

$$\begin{aligned}&\sum_{i,j=1}^{k}\Big\{(v_i \odot (sv_j))\ \mathrm{tr}\Big[P^*S(T)B_iB^1_j(0)\Big] + ((tv_i) \odot v_j)\,\mathrm{tr}\Big[P^*S(T)B^1_i(0)B_j\Big]\Big\}\\ &\quad = \big(v_{\bar{i}} \odot (sv_{\bar{j}})\big)\ \mathrm{tr}\Big[P^*S(T)B_{\bar{i}}B^1_{\bar{j}}(0)\Big] + \big(v_{\bar{j}} \odot (sv_{\bar{i}})\big)\ \mathrm{tr}\Big[P^*S(T)B_{\bar{j}}B^1_{\bar{i}}(0)\Big]\\ &\qquad + \left(\int_0^\delta v_{\bar{i}}(s)\,ds\right)\left(\int_0^\delta sv_{\bar{i}}(s)\,ds\right)\mathrm{tr}\Big[P^*S(T)B_{\bar{i}}B^1_{\bar{i}}(0)\Big]\\ &\quad + \big((tv_{\bar{i}}) \odot v_{\bar{j}}\big)\ \mathrm{tr}\Big[P^*S(T)B^1_{\bar{i}}(0)B_{\bar{j}}\Big] + \big((tv_{\bar{j}}) \odot v_{\bar{i}}\big)\ \mathrm{tr}\Big[P^*S(T)B^1_{\bar{j}}(0)B_{\bar{i}}\Big]\\ &\qquad + \left(\int_0^\delta v_{\bar{j}}(s)\,ds\right)\left(\int_0^\delta sv_{\bar{j}}(s)\,ds\right)\mathrm{tr}\Big[P^*S(T)B_{\bar{j}}B^1_{\bar{j}}(0)\Big].\end{aligned}$$

By the same arguments as above, the sum of the third and fourth terms in the

right-hand side of (4.20) can be written as

$$\begin{aligned}
&\sum_{i,j=1}^{k}\Bigg\{\left(v_i\odot\left(\frac{s^2v_j}{2}\right)\right)\operatorname{tr}\Big[P^*S(T)B_iB_j^2(0)\Big] \\
&\qquad\qquad+\left(\left(\frac{t^2v_i}{2}\right)\odot v_j\right)\operatorname{tr}\Big[P^*S(T)B_i^2(0)B_j\Big]\Bigg\} \\
&=\left(v_{\bar{i}}\odot\left(\frac{s^2v_{\bar{j}}}{2}\right)\right)\operatorname{tr}\Big[P^*S(T)B_{\bar{i}}B_{\bar{j}}^2(0)\Big]+\left(v_{\bar{j}}\odot\left(\frac{s^2v_{\bar{i}}}{2}\right)\right)\operatorname{tr}\Big[P^*S(T)B_{\bar{j}}B_{\bar{i}}^2(0)\Big] \\
&\qquad+\left(\int_0^\delta v_{\bar{i}}(s)\,ds\right)\left(\int_0^\delta\frac{s^2v_{\bar{i}}(s)}{2}\,ds\right)\operatorname{tr}\Big[P^*S(T)B_{\bar{i}}B_{\bar{i}}^2(0)\Big] \\
&+\left(\left(\frac{t^2v_{\bar{i}}}{2}\right)\odot v_{\bar{j}}\right)\operatorname{tr}\Big[P^*S(T)B_{\bar{i}}^2(0)B_{\bar{j}}\Big]+\left(\left(\frac{t^2v_{\bar{j}}}{2}\right)\odot v_{\bar{i}}\right)\operatorname{tr}\Big[P^*S(T)B_{\bar{j}}^2(0)B_{\bar{i}}\Big] \\
&\qquad\qquad+\left(\int_0^\delta v_{\bar{j}}(s)\,ds\right)\left(\int_0^\delta\frac{s^2v_{\bar{j}}(s)}{2}\,ds\right)\operatorname{tr}\Big[P^*S(T)B_{\bar{j}}B_{\bar{j}}^2(0)\Big],
\end{aligned}$$

the fifth (and last) part of $\frac{1}{2}\,Q_\delta(v)$ is given by

$$\begin{aligned}
&\sum_{i,j=1}^{k}\Big\{\big((tv_i)\odot(sv_j)\big)\operatorname{tr}\Big[P^*S(T)B_i^1(0)B_j^1(0)\Big]\Big\}= \\
&\big((tv_{\bar{i}})\odot(sv_{\bar{j}})\big)\operatorname{tr}\Big[P^*S(T)B_{\bar{i}}^1(0)B_{\bar{j}}^1(0)\Big]+\big((tv_{\bar{j}})\odot(sv_{\bar{i}})\big)\operatorname{tr}\Big[P^*S(T)B_{\bar{j}}^1(0)B_{\bar{i}}^1(0)\Big] \\
&\qquad+\big((tv_{\bar{i}})\odot(sv_{\bar{i}})\big)\operatorname{tr}\Big[P^*S(T)(B_{\bar{i}}^1(0))^2\Big] \\
&\qquad\qquad+\big((tv_{\bar{j}})\odot v_{\bar{j}})\big)\operatorname{tr}\Big[P^*S(T)(B_{\bar{j}}^1(0))^2\Big].
\end{aligned}$$

By integration by parts, we have

$$(tv_{\bar{i}})\odot(sv_{\bar{i}})=\frac{1}{2}\left(\int_0^\delta sv_{\bar{i}}(s)\,ds\right)^2,\quad (tv_{\bar{j}})\odot(sv_{\bar{j}})=\frac{1}{2}\left(\int_0^\delta sv_{\bar{j}}(s)\,ds\right)^2,$$

$$\text{and}\quad (tv_{\bar{j}})\odot(sv_{\bar{i}})=\left(\int_0^\delta sv_{\bar{i}}(s)\,ds\right)\left(\int_0^\delta sv_{\bar{j}}(s)\,ds\right)-(tv_{\bar{i}})\odot(sv_{\bar{j}}).$$

Therefore the last part of $\frac{1}{2}\,Q_\delta(v)$ can be written as

$$\sum_{i,j=1}^{k}\Big\{((tv_i)\odot(sv_j))\ \mathrm{tr}\Big[P^*S(T)B_i^1(0)B_j^1(0)\Big]\Big\} =$$
$$\big((tv_{\bar{i}})\odot(sv_{\bar{j}})\big)\ \mathrm{tr}\Big[P^*S(T)\ \big[B_{\bar{i}}^1(0),B_{\bar{j}}^1(0)\big]\Big]$$
$$+\left(\int_0^\delta sv_{\bar{i}}(s)\,ds\right)\left(\int_0^\delta sv_{\bar{j}}(s)\,ds\right)\ \mathrm{tr}\Big[P^*S(T)B_{\bar{j}}^1(0)B_{\bar{i}}^1(0)\Big]$$
$$+\frac{1}{2}\left(\int_0^\delta sv_{\bar{i}}(s)\,ds\right)^2\ \mathrm{tr}\Big[P^*S(T)(B_{\bar{i}}^1(0))^2\Big]$$
$$+\frac{1}{2}\left(\int_0^\delta sv_{\bar{j}}(s)\,ds\right)^2\ \mathrm{tr}\Big[P^*S(T)(B_{\bar{j}}^1(0))^2\Big].$$

To summarize, we have

$$\frac{1}{2}\,Q_\delta(v) =$$
$$\big(v_{\bar{i}}\odot(sv_{\bar{j}})\big)\ \mathrm{tr}\Big[P^*S(T)B_{\bar{i}}B_{\bar{j}}^1(0)\Big]+\big(v_{\bar{j}}\odot(sv_{\bar{i}})\big)\ \mathrm{tr}\Big[P^*S(T)B_{\bar{j}}B_{\bar{i}}^1(0)\Big]$$
$$+\left(\int_0^\delta v_{\bar{i}}(s)\,ds\right)\left(\int_0^\delta sv_{\bar{i}}(s)\,ds\right)\mathrm{tr}\Big[P^*S(T)B_{\bar{i}}B_{\bar{i}}^1(0)\Big]$$
$$+\big((tv_{\bar{i}})\odot v_{\bar{j}}\big)\ \mathrm{tr}\Big[P^*S(T)B_{\bar{i}}^1(0)B_{\bar{j}}\Big]+\big((tv_{\bar{j}})\odot v_{\bar{i}}\big)\ \mathrm{tr}\Big[P^*S(T)B_{\bar{j}}^1(0)B_{\bar{i}}\Big]$$
$$+\left(\int_0^\delta v_{\bar{j}}(s)\,ds\right)\left(\int_0^\delta sv_{\bar{j}}(s)\,ds\right)\mathrm{tr}\Big[P^*S(T)B_{\bar{j}}B_{\bar{j}}^1(0)\Big]$$
$$+\left(v_{\bar{i}}\odot\left(\frac{s^2v_{\bar{j}}}{2}\right)\right)\ \mathrm{tr}\Big[P^*S(T)B_{\bar{i}}B_{\bar{j}}^2(0)\Big]+\left(v_{\bar{j}}\odot\left(\frac{s^2v_{\bar{i}}}{2}\right)\right)\ \mathrm{tr}\Big[P^*S(T)B_{\bar{j}}B_{\bar{i}}^2(0)\Big]$$
$$+\left(\int_0^\delta v_{\bar{i}}(s)\,ds\right)\left(\int_0^\delta \frac{s^2v_{\bar{i}}(s)}{2}\,ds\right)\mathrm{tr}\Big[P^*S(T)B_{\bar{i}}B_{\bar{i}}^2(0)\Big]$$
$$+\left(\left(\frac{t^2v_{\bar{i}}}{2}\right)\odot v_{\bar{j}}\right)\ \mathrm{tr}\Big[P^*S(T)B_{\bar{i}}^2(0)B_{\bar{j}}\Big]+\left(\left(\frac{t^2v_{\bar{j}}}{2}\right)\odot v_{\bar{i}}\right)\ \mathrm{tr}\Big[P^*S(T)B_{\bar{j}}^2(0)B_{\bar{i}}\Big]$$
$$+\left(\int_0^\delta v_{\bar{j}}(s)\,ds\right)\left(\int_0^\delta \frac{s^2v_{\bar{j}}(s)}{2}\,ds\right)\mathrm{tr}\Big[P^*S(T)B_{\bar{j}}B_{\bar{j}}^2(0)\Big]$$

$$+\left(\int_0^\delta sv_{\bar{i}}(s)\,ds\right)\left(\int_0^\delta sv_{\bar{j}}(s)\,ds\right)\operatorname{tr}\Big[P^*S(T)B^1_{\bar{j}}(0)B^1_{\bar{i}}(0)\Big]$$
$$+\frac{1}{2}\left(\int_0^1 sv_{\bar{i}}(s)\,ds\right)^2\operatorname{tr}\Big[P^*S(T)(B^1_{\bar{i}}(0))^2\Big]$$
$$+\frac{1}{2}\left(\int_0^1 sv_{\bar{j}}(s)\,ds\right)^2\operatorname{tr}\Big[P^*S(T)(B^1_{\bar{j}}(0))^2\Big]$$
$$+\big((tv_{\bar{i}})\odot(sv_{\bar{j}})\big)\operatorname{tr}\Big[P^*S(T)\left[B^1_{\bar{i}}(0),B^1_{\bar{j}}(0)\right]\Big].$$

We now need the following technical result whose proof is given in Appendix.

Lemma 4.2.10 *Denote by $\mathcal{L}_{\bar{i},\bar{j}}$ the set of*

$$v=\big(v_1,\dots,v_k\big)\in L^2([0,1];\mathbb{R}^k)$$

such that

$$v_i(t)=0\quad\forall t\in[0,1],\,\forall i\in\{1,\dots,k\}\setminus\{\bar{i},\bar{j}\},$$

$$\int_0^1 v_{\bar{i}}(s)\,ds=\int_0^1 sv_{\bar{i}}(s)\,ds=\int_0^1 v_{\bar{j}}(s)\,ds=\int_0^1 sv_{\bar{j}}(s)\,ds=0,$$

$$v_{\bar{i}}\odot(sv_{\bar{j}})=v_{\bar{j}}\odot(sv_{\bar{i}})=v_{\bar{i}}\odot(s^2v_{\bar{j}})=v_{\bar{j}}\odot(s^2v_{\bar{i}})=0,$$

and

$$(tv_{\bar{i}})\odot(sv_{\bar{j}})>0.$$

Then, for every integer $N>0$, there are a vector space $L^N_{\bar{i},\bar{j}}\subset\mathcal{L}_{\bar{i},\bar{j}}\cup\{0\}$ of dimension N and a constant $K(N)>0$ such that

$$\big(tv_{\bar{i}}\big)\odot\big(sv_{\bar{j}}\big)\geq\frac{1}{K(N)}\|v\|^2_{L^2}\qquad\forall v\in L^N_{\bar{i},\bar{j}}.$$

Let us now show how to conclude the proof of Lemma 4.2.9. Recall that $P\in T_{\bar{X}(T)}\mathrm{Sp}(m)$ was fixed such that P belongs to $\big(\mathrm{Im}\big(D_0E^{I,T}\big)\big)^\perp\setminus\{0\}$ and that by Lemma 4.2.7, we know that (taking $t=0$)

$$P\cdot S(T)B^j_i(0)=0\qquad\forall j\geq 0,\,\forall i\in 1,..,k.$$

By (4.10) ($\bar{t}=0$), we also have

$$\mathrm{Span}\Big\{S(T)B^j_i(0),S(T)[B^1_i(0),B^1_s(0)]\,|\,i,s\in 1,..,k,\ j=0,1,2\Big\}=T_{\bar{X}(T)}Sp(m).$$

Consequently, we infer that there are $\bar{i}, \bar{j} \in \{1, \dots, k\}$ with $\bar{i} \neq \bar{j}$ such that

$$\operatorname{tr}\Big(P^* S(T)\left[B^1_{\bar{i}}(0), B^1_{\bar{j}}(0)\right]\Big) < 0.$$

Let $N > 0$ an integer be fixed, $L^N_{\bar{i},\bar{j}} \subset \mathcal{L}_{\bar{i},\bar{j}} \cup \{0\}$ of dimension N and the constant $K(N) > 0$ given by Lemma 4.2.10, for every $\delta \in (0,t)$ denote by L^N_δ the vector space of $u \in L^2\big([0,\delta];\mathbb{R}^k\big) \subset L^2\big([0,T];\mathbb{R}^k\big)$ such that there is $v \in L_{\bar{i},\bar{j}}$ satisfying

$$u(t) = v(t/\delta) \qquad \forall t \in [0,\delta].$$

For every $v \in L_{\bar{i},\bar{j}}$, the control $u_\delta : [0,T] \to \mathbb{R}^k$ defined by

$$u_\delta(t) := v(t/\delta) \qquad t \in [0,\delta]$$

belongs to L^N_δ and by an easy change of variables,

$$\big\|u_\delta\big\|^2 = \int_0^T \big|u_\delta(t)\big|^2\,dt = \int_0^\delta \big|u_\delta(t)\big|^2\,dt = \delta\int_0^1 |v(t)|^2\,dt = \delta\|v\|^2.$$

Moreover it satisfies

$$Q_\delta(u_\delta) = 2\left(\left(tv_{\bar{i}}\right)\odot\left(sv_{\bar{j}}\right)\right)\,\delta^4\operatorname{tr}\Big(P^* S(T)\left[B^1_{\bar{i}}(0), B^1_{\bar{j}}(0)\right]\Big).$$

Then we infer that

$$\begin{aligned}\frac{Q_\delta(u_\delta)}{\|u_\delta\|^2_{L^2}\delta^4} &= \frac{2\left(\left(tv_{\bar{i}}\right)\odot\left(sv_{\bar{j}}\right)\right)}{\delta\|v\|^2_{L^2}}\operatorname{tr}\Big(P^* S(T)\left[B^1_{\bar{i}}(0), B^1_{\bar{j}}(0)\right]\Big)\\ &\leq \frac{2}{\delta K(N)}\operatorname{tr}\Big(P^* S(T)\left[B^1_{\bar{i}}(0), B^1_{\bar{j}}(0)\right]\Big).\end{aligned}$$

We get the result for $\delta > 0$ small enough. □

We can now conclude the proof of Proposition 4.2.2. First we note that given $N \in \mathbb{N}$ strictly larger than $m(2m+1)$, if $L \subset L^2\big([0,T];\mathbb{R}^k\big)$ is a vector space of dimension N, then the linear operator

$$\big(D_0E^{I,T}\big)_{|L} \,:\, L \to T_{\bar{X}(T)}\mathrm{Sp}(m) \subset M_{2m}(\mathbb{R})$$

has a kernel of dimension at least $N - m(2m+1)$, which means that

$$\operatorname{Ker}\big(D_0E^{I,T}\big) \cap L$$

has dimension at least $N - m(2m+1)$. Then, thanks to Lemma 4.2.9, for every integer $N > 0$, there are $\delta > 0$ and a subspace $L_\delta \subset L^2\big([0,\delta];\mathbb{R}^k\big) \subset L^2\big([0,T];\mathbb{R}^k\big)$ such

that the dimension of $\tilde{L}_\delta := L_\delta \cap \mathrm{Ker}\left(D_0 E^{I,T}\right)$ is larger than N and the restriction of Q_δ to $\tilde{L}_\delta$ satisfies

$$Q_\delta(u) \leq -2C\|u\|_{L^2}^2 \delta^4 \qquad \forall u \in \tilde{L}_\delta.$$

By Lemma 4.2.8, we have

$$P \cdot D_0^2 E^{I,T}(u) \leq Q_\delta(u) + C\delta^4 \|u\|_{L^2}^2 \qquad \forall u \in \tilde{L}_\delta.$$

Then we infer that

$$P \cdot D_0^2 E^{I,T}(u) \leq -C\delta^4 \|u\|_{L^2}^2 < 0 \qquad \forall u \in \tilde{L}_\delta. \tag{4.21}$$

Note that since $E^{I,T}$ is valued in $\mathrm{Sp}(m)$ which is a submanifold of $M_{2m}(\mathbb{R})$, assumption (4.14) is not satisfied and Theorems 4.2.5 and 4.2.6 do not apply.

Let $\Pi : M_{2m}(\mathbb{R}) \to T_{\bar{X}(T)}Sp(m)$ be the orthogonal projection onto $T_{\bar{X}(T)}Sp(m)$. Its restriction to $\mathrm{Sp}(m)$, $\bar{\Pi} := \Pi_{|\mathrm{Sp}(m)}$, is a smooth mapping whose differential at $\bar{X}(T)$ is equal to the identity of $T_{\bar{X}(T)}Sp(m)$ so it is an isomorphism. Thanks to the Inverse Function Theorem (for submanifolds), $\bar{\Pi}$ is a local C^∞-diffeomorphism at $\bar{X}(T)$. Hence there exist $\mu > 0$ such that the restriction of $\bar{\Pi}$ to $B\Big(\bar{X}(T), \mu\Big) \cap \mathrm{Sp}(m)$

$$\bar{\Pi}_{|B(\bar{X}(T),\mu)\cap Sp(m)} : B\Big(\bar{X}(T), \mu\Big) \cap \mathrm{Sp}(m) \to \bar{\Pi}\Big(B\Big(\bar{X}(T), \mu\Big) \cap \mathrm{Sp}(m)\Big)$$

is a smooth diffeomorphism. The map $E^{I,T}$ is continuous so

$$\mathcal{U} := (E^{I,T})^{-1}\Big(B\Big(\bar{X}(T), \mu\Big) \cap \mathrm{Sp}(m)\Big)$$

is an open set of $L^2([0,T];\mathbb{R}^k)$ containing $\bar{u} = 0$. Define the function $F : \mathcal{U} \to T_{\bar{X}(T)}Sp(m)$ by $F := \bar{\Pi} \circ E^{I,T} = \Pi \circ E^{I,T}$. The mapping F is C^2 and we have

$$F(\bar{u}) = \bar{X}(T), \quad D_{\bar{u}}F = D_{\bar{u}}E^{I,T} \quad \text{and} \quad D_{\bar{u}}^2 F = \Pi \circ D_{\bar{u}}^2 E^{I,T}.$$

Let us check that F satisfies assumption (4.14). For every $P \in T_{\bar{X}(T)}\mathrm{Sp}(m)$ such that P belongs to $\Big(\mathrm{Im}\big(D_{\bar{u}}F\big)\Big)^\perp \setminus \{0\}$ and every $v \in L^2([0,T];\mathbb{R}^k)$, we have

$$P \cdot D_{\bar{u}}^2 E^{I,T}(v) = P \cdot \Pi \circ D_{\bar{u}}^2 E^{I,T}(u) + P \cdot \Big(D_{\bar{u}}^2 E^{I,T}(u) - \Pi \circ D_{\bar{u}}^2 E^{I,T}(u)\Big).$$

But

$$D_{\bar{u}}^2 E^{I,T}(u) - \Pi \circ D_{\bar{u}}^2 E^{I,T}(u) \in \Big(T_{\bar{X}(T)}\mathrm{Sp}(m)\Big)^\perp,$$

hence

$$P \cdot D_{\bar{u}}^2 E^{I,T}(u) = P \cdot D_{\bar{u}}^2 F(u).$$

Therefore, by (4.21), assumption (4.14) is satisfied. Consequently, thanks to Theorem 4.2.6 there exist $\bar{\epsilon}, c \in (0,1)$ such that for every $\epsilon \in (0,\bar{\epsilon})$ the following property holds : For every $u \in \mathcal{U}, Z \in T_{\bar{X}(T)}\mathrm{Sp}(m)$ with

$$\|u-\bar{u}\|_{L^2} < \epsilon, \quad |Z - F(u)| < c\,\epsilon^2,$$

there are $w_1, w_2 \in L^2\big([0,T];\mathbb{R}^k\big)$ such that $u + w_1 + w_2 \in \mathcal{U}$,

$$Z = F\big(u + w_1 + w_2\big),$$

and

$$w_1 \in \mathrm{Ker}\,(D_uF)\,, \quad \big\|w_1\big\|_{L^2} < \epsilon, \quad \big\|w_2\big\|_{L^2} < \epsilon^2.$$

Apply the above property with $u = \bar{u}$ and $X \in \mathrm{Sp}(m)$ such that

$$\big|X - \bar{X}(T)\big| =: \frac{c\epsilon^2}{2} \text{ with } \epsilon < \bar{\epsilon}.$$

Set $Z := \Pi(X)$, then we have (Π is an orthogonal projection so it is 1-lipschitz)

$$|Z - F(\bar{u})| = \big|\Pi(X) - \Pi(\bar{X}(T))\big| \leq \big|X - \bar{X}(T)\big| = \frac{c\epsilon^2}{2} < c\epsilon^2.$$

Therefore by the above property, there are $w_1, w_2 \in L^2\big([0,T];\mathbb{R}^k\big)$ such that $\tilde{u} := \bar{u} + w_1 + w_2 \in \mathcal{U}$ satisfies

$$Z = F\big(\tilde{u}\big),$$

and

$$\big\|\tilde{u}\big\|_{L^2} \leq \|w_1\|_{L^2} + \|w_2\|_{L^2} \leq \epsilon + \epsilon^2.$$

Since $\bar{\Pi}_{|B(\bar{X}(T),\mu)\cap Sp(m)}$ is a local diffeomorphism, taking $\epsilon > 0$ small enough, we infer that

$$X = E^{I,T}\big(\tilde{u}\big) \quad \text{and} \quad \big\|\tilde{u}\big\|_{L^2} \leq 2\epsilon = 2\sqrt{\frac{2}{c}}\,\big|X - \bar{X}(T)\big|^{1/2}.$$

In conclusion, the control system (4.1) is controllable at second order around $\bar{u} \equiv 0$, which concludes the proof of Proposition 2.2.

4.2.6 Proof of Proposition 4.2.4

As in the proof of Proposition 4.2.2, we may assume without loss of generality that $\bar{X} = I_{2m}$. Recall that for every $\theta \in \Theta$, $E^{I,T}_\theta : L^2\big([0,T];\mathbb{R}^k\big) \to \mathrm{Sp}(m) \subset M_{2m}(\mathbb{R})$

denotes the End-Point mapping associated with (4.1) with parameter θ starting at $I = I_{2m}$. Given $\theta \in \Theta$ two cases may appear, either $E_\theta^{I,T}$ is a submersion at $\bar{u} \equiv 0$ or is not submersion at $\bar{u} \equiv 0$. Let us denote by $\Theta_1 \subset \Theta$ the set of parameters θ where $E_\theta^{I,T}$ is submersion at $\bar{u} \equiv 0$ and by Θ_2 its complement in Θ. By continuity of the mapping $\theta \mapsto D_0 E_\theta^{I,T}$ the set Θ_1 is open in Θ while Θ_2 is compact.

For every $\theta \in \Theta_1$, since $E_\theta^{I,T}$ is submersion at $\bar{u}$, we have uniform controllability at first order around $\bar{u}$ for a set of parameters close to $\bar{\theta}$. So we need to show that we have controllability at second order around $\bar{u}$ for any parameter in some neighborhood of Θ_2.

By the proof of Proposition 4.2.2 (see (4.21)), for every $\theta \in \Theta_2$, every P in the nonempty set $\left(\mathrm{Im}\big(D_0 E_\theta^{I,T}\big)\right)^\perp \setminus \{0\}$ and every integer $N > 0$ there exists a finite dimensional subspace $L_{\theta,P,N} \subset L^2([0,T];\mathbb{R}^k)$ with

$$D := \dim\left(L_{\theta,P,N}\right) > N,$$

such that

$$P \cdot D_0^2 E_\theta^{I,T}(u) < 0 \qquad \forall u \in L_{\theta,P,N} \setminus \{0\}$$

and

$$\dim\left(L_{\theta,P,N} \cap \mathrm{Ker}\left(D_0 E_\theta^{I,T}\right)\right) \geq N - m(2m+1).$$

By bilinearity of $u \mapsto P \cdot D_0^2 E_\theta^{I,T}(u)$ and compactness of the sphere in $L_{\theta,P,N}$, there is $C_{\theta,P,N} > 0$ such that

$$P \cdot D_0^2 E_\theta^{I,T}(u) \leq -C_{\theta,P,N} \left\|u\right\|_{L^2}^2 \qquad \forall u \in L_{\theta,P,N}.$$

Let $u^1, \ldots, u^D \in L^2([0,T];\mathbb{R}^k)$ be a basis of $L_{\theta,P,N}$ such that

$$\|u^i\|_{L^2} = 1 \qquad \forall i = 1, \ldots, D.$$

Since the set of controls $u \in C^\infty([0,T],\mathbb{R}^k)$ with $\mathrm{Supp}(u) \subset (0,T)$ is dense in $L^2([0,T],\mathbb{R}^k)$, there is a linearly independent family $\tilde{u}^1, \ldots, \tilde{u}^D$ in $C^\infty([0,T],\mathbb{R}^k)$ with $\mathrm{Supp}(u) \subset (0,T)$ (from now we will denote by $C_0^\infty([0,T],\mathbb{R}^k)$ the set of functions in $C^\infty([0,T],\mathbb{R}^k)$ with support in $(0,T)$) such that

$$P \cdot D_0^2 E_\theta^{I,T}(u) \leq -\frac{C_{\theta,P,N}}{2} \left\|u\right\|_{L^2}^2 \qquad \forall u \in \tilde{L}_{\theta,P,N} := \mathrm{Span}\left\{\tilde{u}^i \,|\, i = 1, \ldots, D\right\}.$$

Moreover by continuity of the mapping $(P,\theta) \mapsto P \cdot D_0^2 E_\theta^{I,T}$, we may also assume that the above inequality holds for any $\tilde{\theta}$ close to θ and $\tilde{P}$ close to P. Let an integer $N > 0$ be fixed, we check easily that the set

$$\mathcal{A} := \left\{(\theta, P) \in \Theta \times M_{2m}(\mathbb{R}) \,|\, \|P\| = 1,\ P \in \left(\mathrm{Im}\big(D_0 E_\theta^{I,T}\big)\right)^\perp\right\}$$

is compact. Therefore, by the above discussion there is a finite family $\{(\theta_a, P_a)\}_{a=1,\dots,A}$ in $\mathcal{A}$ together with a finite family of open neighborhoods $\{\mathcal{V}_a\}_{a=1,\dots,A}$ of the pairs (θ_a, P_a) $(a = 1, \dots, A)$ in $\mathcal{A}$ such that

$$\mathcal{A} = \bigcup_{a=1}^{A} \mathcal{V}_a$$

and there is a finite family of $\{\tilde{L}_a\}_{a=1,\dots,A}$ of finite dimensional subspaces in $C_0^\infty([0,T], \mathbb{R}^k)$ such that

$$P \cdot D_0^2 E_\theta^{I,T}(u) < 0 \qquad \forall u \in \tilde{L}_a \setminus \{0\},$$

for every $a \in \{1, \dots, A\}$ and any (θ, P) in $\mathcal{V}_a$. Then set

$$\tilde{L}(N) := \bigcup_{a=1}^{A} \tilde{L}_a \subset C_0^\infty([0,T], \mathbb{R}^k),$$

pick a basis $\tilde{u}^1, \dots, \tilde{u}^B$ of $\tilde{L}(N)$ and define $F^N : \Theta \times \mathbb{R}^B \to \mathrm{Sp}(m)$ by

$$F_\theta^N(\lambda) := E_\theta^{I,T}\left(\sum_{b=1}^{B} \lambda_b \tilde{u}^b\right) \qquad \forall \lambda = (\lambda_1, ..., \lambda_B) \in \mathbb{R}^B,\ \forall \theta \in \Theta.$$

By construction, F^N is at least C^2 and for every $\theta \in \Theta_2$ and every $P \in \left(\mathrm{Im}\left(D_0 F_\theta^N\right)\right)^\perp \setminus \{0\}$, there is a subspace $L_{\theta,P}^N \subset \tilde{L}(N)$ such that

$$\dim\left(L_{\theta,P}^N\right) > N,$$

$$P \cdot D_0^2 F_\theta^N(u) < 0 \qquad \forall u \in L_{\theta,P}^N \setminus \{0\}$$

and

$$\dim\left(L_{\theta,P}^N \cap \mathrm{Ker}\left(D_0 F_\theta^N\right)\right) \geq N - m(2m+1).$$

As in the proof of Proposition 4.2.2, we need to be careful because F^N is valued in $\mathrm{Sp}(m)$. Given $\bar{\theta}$, we denote by $\Pi_{\bar{\theta}} : M_{2m}(\mathbb{R}) \to T_{\bar{X}_{\bar{\theta}}(T)} Sp(m)$ the orthogonal projection onto $T_{\bar{X}_{\bar{\theta}}(T)}\mathrm{Sp}(m)$ and observe that the restriction of Π to $T_{\bar{X}_\theta(T)}\mathrm{Sp}(m)$ is an isomorphism for $\theta \in \mathcal{W}_{\bar{\theta}}$ an open neighborhood of $\bar{\theta}$. Then we define $G^{N,\bar{\theta}} : \Theta \times \mathbb{R}^B \to T_{\bar{X}_{\bar{\theta}}(T)}\mathrm{Sp}(m)$ by

$$G_\theta^{N,\bar{\theta}}(\lambda) := \Pi_{\bar{\theta}}\left(F_\theta^N(\lambda)\right) \qquad \forall \lambda \in \mathbb{R}^B,\ \forall \theta \in \mathcal{W}_{\bar{\theta}}.$$

Taking N large enough, by compactness of Θ_2, a parametric version of Theorem 4.2.6 (see [44]) yields $\bar{\epsilon}, c \in (0,1)$ such that for every $\epsilon \in (0, \bar{\epsilon})$ and for any $\bar{\theta} \in \Theta_2$ the following property holds : For every $\theta \in \mathcal{W}_{\bar{\theta}}, \lambda \in \mathbb{R}^B, Z \in T_{\bar{X}_\theta(T)}\mathrm{Sp}(m)$ with

$$|\lambda|_{L^2} < \epsilon, \quad \left|Z - G_\theta^{N,\bar{\theta}}(\lambda)\right| < c\,\epsilon^2,$$

there are $\beta_1, \beta_2 \in \mathbb{R}^B$ such that

$$Z = G_\theta^{N,\bar\theta}\big(\lambda + \beta_1 + \beta_2\big),$$

and

$$\beta_1 \in \mathrm{Ker}\left(D_\lambda G_\theta^{N,\bar\theta}\right), \quad \big|\beta_1\big| < \epsilon, \quad \big|\beta_2\big| < \epsilon^2.$$

Note that any

$$\sum_{b=1}^{B} \lambda_b \tilde{u}^b \quad \text{with} \quad \lambda = (\lambda_1, ..., \lambda_B) \in \mathbb{R}^B$$

is a smooth control whose support is strictly contained in $[0, T]$. Then proceeding as in the proof of Proposition 4.2.2 we conclude easily.

4.3 Proof of Theorem 4.1.1

We recall that given a geodesic $\gamma_\theta : [0, T] \to M$, an interval $[t_1, t_2] \subset [0, T]$ and $\rho > 0$, $\mathcal{C}_g\left(\gamma_\theta\big([t_1, t_2]\big); \rho\right)$ stands for the open geodesic cylinder along $\gamma_\theta\big([t_1, t_2]\big)$ of radius ρ, that is the open set defined by

$$\mathcal{C}_g\left(\gamma_\theta\big([t_1, t_2]\big); \rho\right) :=$$
$$\Big\{p \in M \,|\, \exists t \in (t_1, t_2) \text{ with } d_g\big(p, \gamma_\theta(t)\big) < \rho \text{ and } d_g\big(p, \gamma_\theta([t_1, t_2])\big) = d_g\big(p, \gamma_\theta(t)\big)\Big\}.$$

The following holds :

Lemma 4.3.1 *Let (M, g) be a compact Riemannian manifold of dimension ≥ 2. Then for every $T > 0$, there exists $\tau_T \in (0, T)$ such that for every $\theta \in T_1M$, there are $\bar t \in [0, T - \tau_T]$ and $\bar\rho > 0$ such that*

$$\mathcal{C}_g\Big(\gamma_\theta\left(\big[\bar t, \bar t + \tau_T\big]\right); \bar\rho\Big) \cap \gamma_\theta([0, T]) = \gamma_\theta\left(\big(\bar t, \bar t + \tau_T\big)\right).$$

Proof of Lemma 4.3.1 : Let $r_g > 0$ be the injectivity radius of (M, g), that is the supremum of $r > 0$ such that any geodesic arc of length r is minimizing between its end-points. We call self-intersection of the geodesic curve $\gamma_\theta([0, T])$ any $p \in M$ such that there are $t \neq t'$ in $[0, T]$ such that $\gamma_\theta(t) = \gamma_\theta(t') = p$. We claim that for every integer $k > 0$ the number of self-intersection of a (non-periodic) geodesic of length $k\, r_g$ is bounded by

$$N(k) := \sum_{i=0}^{k-1} i = \frac{k(k-1)}{2}.$$

We prove it by induction. Since any geodesic of length r_g has no self-intersection, the result holds for $k = 1$. Assume that we proved the result for k and prove it for $(k+1)$. Let $\gamma : [0, (k+1)r_g] \to M$ be a unit speed geodesic of length $(k+1)r_g$. The geodesic segment $\gamma([kr_g, (k+1)r_g])$ has no self-intersection but it could intersect the segment $\gamma([0, kr_g])$. If the number of intersection of $\gamma([kr_g, (k+1)r_g])$ with $\gamma([0, kr_g])$ is greater or equal than $(k+1)$, then there are $t_1 \neq t_2 \in [kr_g, (k+1)r_g]$, $i \in \{0, \dots, k-1\}$, and $s_1, s_2 \in [ir_g, (i+1)r_g]$ such that

$$\gamma(t_1) = \gamma(s_1) \quad \text{and} \quad \gamma(t_2) = \gamma(s_2).$$

Since γ is not periodic, this means that two geodesic arcs of length $\leq r_g$ join $\gamma(t_1)$ to $\gamma(t_2)$, a contradiction. We infer that the number of self-intersection of γ is bounded by $N(k) + k$, and in turn that it is bounded by $N(k+1)$. We deduce that for every integer $k \geq 2$, all the disjoint open intervals

$$I_i := \left(i\frac{kr_g}{N(k)}, (i+1)\frac{kr_g}{N(k)} \right) \qquad i = 0, \dots, N(k) - 1$$

can not contain a point of self-intersection of a unit speed geodesic $\gamma : [0, kr_g] \to M$. Hence for every unit speed geodesic $\gamma : [0, kr_g] \to M$ there is $i \in \{0, \dots, N(k) - 1\}$ such that no self-intersection of γ is contained in the closed interval

$$\left[i\frac{kr_g}{N(k)}, (i+1)\frac{kr_g}{N(k)} \right].$$

We conclude easily. □

Let $T > 0$ be fixed, $\tau_T \in (0, T)$ given by Lemma 4.3.1 and $\gamma_\theta : [0, T] \to M$ be a unit speed geodesic of length T. Then there are $\bar{t} \in [0, T - \tau_T]$ and $\rho > 0$ such that

$$\mathcal{C}_g\Big(\gamma_\theta\left(\left[\bar{t}, \bar{t} + \tau_T\right]\right); \rho\Big) \cap \gamma_\theta([0, T]) = \gamma_\theta\left(\left(\bar{t}, \bar{t} + \tau_T\right)\right).$$

Set

$$\bar{\theta} = (\bar{p}, \bar{v}) := (\gamma_\theta(\bar{t}), \dot{\gamma}_\theta(\bar{t})) \quad \tilde{\theta} = (\tilde{p}, \tilde{v}) := (\gamma_\theta(\bar{t}), \dot{\gamma}_\theta(\bar{t} + \tau_T)),$$
$$\theta_T = (p_T, v_T) := (\gamma_\theta(T), \dot{\gamma}_\theta(T)),$$

and consider local transverse sections $\Sigma_0, \bar{\Sigma}, \tilde{\Sigma}, \Sigma_T \subset T_1M$ respectively tangent to $N_\theta, N_{\bar{\theta}}, N_{\tilde{\theta}}, N_{\theta_T}$. Then we have

$$P_g(\gamma)(T) = D_\theta \mathbb{P}_g(\Sigma_0, \Sigma_T, \gamma) = D_{\tilde{\theta}} \mathbb{P}_g\big(\tilde{\Sigma}, \Sigma_T, \gamma\big) \circ D_{\bar{\theta}} \mathbb{P}_g\big(\bar{\Sigma}, \tilde{\Sigma}, \gamma\big) \circ D_\theta \mathbb{P}_g\big(\Sigma_0, \bar{\Sigma}, \gamma\big).$$

Since the sets of symplectic endomorphism of $\mathrm{Sp}(n-1)$ of the form $D_{\tilde{\theta}} \mathbb{P}_g\big(\tilde{\Sigma}, \Sigma_T, \gamma\big)$ and $D_\theta \mathbb{P}_g\big(\Sigma_0, \bar{\Sigma}, \gamma\big)$ (that is the differential of Poincaré maps associated with geodesics of lengths $T - \bar{t} - \tau_T$ and $\bar{t}$) are compact and the left and right translations in

$\mathrm{Sp}(n-1)$ are diffeomorphisms, it is sufficient to prove Theorem 4.1.1 with $\tau_T = T$. More exactly, it is sufficient to show that there are $\delta_T, K_T > 0$ such that for every $\delta \in (0, \delta_T)$ and every $\rho > 0$, the following property holds :
Let $\gamma_\theta : [0, \tau_T] \to M$ be a geodesic in M, U be the open ball centered at $P_g(\gamma)(\tau_T)$ of radius δ in $\mathrm{Sp}(n-1)$. Then for each symplectic map $A \subset U$ there exists a C^∞ metric h in M that is conformal to g, $h_p(v, w) = (1 + \sigma(p))g_p(v, w)$, such that

1. The geodesic $\gamma_\theta : [0, \tau_T] \longrightarrow M$ is still a geodesic of (M, h),
2. $\mathrm{Supp}(\sigma) \subset \mathcal{C}_g\left(\gamma_\theta\left([0, \tau_T]\right); \rho\right)$,
3. $P_h(\gamma_\theta)(\tau_T) = A$,
4. the C^2 norm of the function σ is less than $K_T\sqrt{\delta}$.

Set $\tau := \tau_T$ and let $\gamma : [0, \tau] \to M$ a geodesic in M be fixed, we consider a Fermi coordinate system $\Phi(t, x_1, x_2, .., x_{n-1})$, $t \in (0, \tau)$, $(x_1, x_2, .., x_{n-1}) \in (-\delta, \delta)^{n-1}$ along $\gamma([0, \tau])$, where t is the arc length of γ, and the coordinate vector fields $e_1(t), \ldots, e_{n-1}(t)$ of the system are orthonormal and parallel along γ. Let us consider the family of smooth functions $\{P_{ij}\}_{i,j=1,\ldots,n-1} : \mathbb{R}^{n-1} \to \mathbb{R}$ defined by

$$P_{ij}\big(y_1, y_2, .., y_{n-1}\big) := y_i y_j \, Q\big(|y|\big) \qquad \forall i \neq j \in \{1, \ldots, n-1\}$$

and

$$P_{ii}(y_1, y_2, .., y_{n-1}) := \frac{y_i^2}{2} \, Q\big(|y|\big) \qquad \forall i \in \{1, \ldots, n-1\},$$

for every $y = (y_1, y_2, .., y_{n-1}) \in \mathbb{R}^{n-1}$ where $Q : [0, +\infty) \to [0, +\infty)$ is a smooth cutoff function satisfying

$$\begin{cases} Q(\lambda) = 1 & \text{if} \quad \lambda \leq 1/3 \\ Q(\lambda) = 0 & \text{if} \quad \lambda \geq 2/3. \end{cases}$$

Given a radius $\rho > 0$ with $\mathcal{C}_g\left(\gamma\left([0, \tau]\right); \rho\right) \subset \Phi((0, \tau) \times (-\delta, \delta)^{n-1})$ and a family of smooth function $u = (u_{ij})_{i \leq j = 1,\ldots,n-1} : [0, \tau] \to \mathbb{R}$ such that

$$\mathrm{Supp}\big(u_{ij}\big) \subset (0, \tau) \qquad \forall i \leq j \in \{1, \ldots, n-1\},$$

we define a family of smooth perturbations

$$\left\{\sigma_{ij}^{\rho,u}\right\}_{i \leq j = 1,\ldots,n-1} : M \longrightarrow \mathbb{R}$$

with support in $\Phi((0, \tau) \times (-\delta, \delta)^{n-1})$ by

$$\sigma_{ij}^{\rho,u}\left(\Phi\big(t, x_1, x_2, .., x_{n-1}\big)\right) := \rho^2 \; u_{ij}(t) P_{ij}\left(\frac{x_1}{\rho}, \frac{x_2}{\rho}, .., \frac{x_{n-1}}{\rho}\right),$$

for every $p = \Phi\big(t, x_1, x_2, .., x_{n-1}\big) \in \Phi\left((0,\tau) \times (-\delta,\delta)^{n-1}\right)$ and we define $\sigma^{\rho,u} : M \to \mathbb{R}$ by

$$\sigma^{\rho,u} := \sum_{i,j=1, i\leq j}^{n-1} \sigma_{ij}^{\rho,u}.$$

The following result follows by construction, its proof is left to the reader. The notation ∂_l with $l = 0, 1, \ldots, n-1$ stands for the partial derivative in coordinates $x_0 = t, x_1, \ldots, x_{n-1}$ and $H\sigma^{\rho,u}$ denotes the Hessian of $\sigma^{\rho,u}$ with respect to g.

Lemma 4.3.2 *The following properties hold :*

1. *Supp*$(\sigma^{\rho,u}) \subset \mathcal{C}_g\left(\gamma\left([0,\tau]\right); \rho\right)$,
2. $\sigma^{\rho,u}(\gamma(t)) = 0$ *for every* $t \in (0,\tau)$,
3. $\partial_l \sigma^{\rho,u}(\gamma(t)) = 0$ *for every* $t \in (0,\tau)$ *and* $l = 0, 1, \ldots, n-1$,
4. $\left(H\sigma^{\rho,u}\right)_{i,0}(\gamma(t)) = 0$ *for every* $t \in (0,\tau)$ *and* $i = 1, \ldots, n-1$,
5. $\left(H\sigma^{\rho,u}\right)_{i,j}(\gamma(t)) = u_{ij}(t)$ *for every* $t \in (0,\tau)$ *and* $i, j = 1, \ldots, n-1$,
6. $\|\sigma^{\rho,u}\|_{C^2} \leq C\|u\|_{C^2}$ *for some universal constant* $C > 0$.

Set $m = n-1$ and $k := m(m+1)/2$. Let $u = (u_{ij})_{i\leq j=1,\ldots,n-1} : [0,\tau] \to \mathbb{R}$ be a family of smooth functions with support strictly contained in $(0,\tau)$ and $\rho \in (0,\bar{\rho})$ be fixed, using the previous notations we set the conformal metric

$$h := \left(1 + \sigma^{\rho,u}\right)^2 g.$$

We denote by $\langle\cdot,\cdot\rangle, \nabla, \Gamma, \mathrm{H}, \mathrm{Rm}$ respectively the scalar product, gradient, Christoffel symbols, Hessian and curvature tensor associated with g. With the usual notational conventions of Riemannian geometry (as in [18]), in components we have

$$\begin{cases} \Gamma_{ij}^k &= \frac{1}{2}\Big(\partial_i g_{jm} + \partial_j g_{im} - \partial_m g_{ij}\Big) g^{mk} \\ (\mathrm{H}f)_{ij} &= \partial_{ij} f - \Gamma_{ij}^k \partial_k f, \end{cases}$$

where $(g^{k\ell})$ stands for the inverse of $(g_{k\ell})$, and we use Einstein's convention of summation over repeated indices. We shall use a superscript h to denote the same objects when they are associated with the metric h. As usual $\delta_{ij} = \delta^{ij} = \delta_i^j$ will be 1 if $i = j$, and 0 otherwise. The Christoffel symbols are modified as follows by a conformal change of metrics : if $h = e^{2f} g$ then (see for example [41])

$$(\Gamma^h)_{ij}^k = \Gamma_{ij}^k + \big(\partial_i f \delta_j^k + \partial_j f \delta_i^k - \partial_m f g_{ij} g^{mk}\big).$$

Thus, since $f = \ln(1 + \sigma^{\rho,u})$ and its derivatives $\partial_0 f, \partial_1 f, \ldots, \partial_{n-1} f$ vanish along $\gamma([0,\tau])$ (by Lemma 4.3.2 (2)-(3)), the Christoffel symbols of h and g coincide along

γ. Then the family of tangent vectors $e_0(t) = \dot\gamma(t), e_1(t), \dots, e_{n-1}(t)$ is still a family which is orthonormal and parallel along $\gamma([0,\tau])$. Moreover, if $h = e^{2f} g$ then the curvature tensor $\mathrm{Rm}^h, \mathrm{Rm}$ respectively of h and g satisfy

$$e^{-2f} \left\langle \mathrm{Rm}^h(u,v)\, v, w \right\rangle^h = \langle \mathrm{Rm}(u,v)\, v, w\rangle - \mathrm{H}f(u,w),$$

at any $p \in M$ where ∇f vanishes and any tangent vectors $u, v, w \in T_pM$ such that $u, w \perp v$ and $Hf(v,\cdot) = 0$. By Lemma 4.3.2 (2)-(5), we infer that along $\gamma([0,\tau])$, we have for every $i, j \in \{1, \dots, n-1\}$ and every $t \in [0,\tau]$,

$$\begin{aligned} R^h_{ij}(t) &:= \left\langle \mathrm{Rm}^h_{\gamma(t)}\left(e_i(t), \dot\gamma(t)\right) \dot\gamma(t), e_j(t) \right\rangle^h_{\gamma(t)} \\ &= \left\langle \mathrm{Rm}_{\gamma(t)}\left(e_i(t), \dot\gamma(t)\right) \dot\gamma(t), e_j(t) \right\rangle_{\gamma(t)} - u_{ij}(t) \\ &= R_{ij}(t) - u_{ij}(t), \end{aligned} \tag{4.22}$$

with

$$R_{ij}(t) := \left\langle \mathrm{Rm}_{\gamma(t)}\left(e_i(t), \dot\gamma(t)\right) \dot\gamma(t), e_j(t) \right\rangle_{\gamma(t)}. \tag{4.23}$$

By the above discussion, γ is still a geodesic with respect to h and by construction (Lemma 4.3.2 (1)) the support of $\sigma^{\rho,u}$ is contained in a cylinder of radius ρ, so properties (1) and (2) above are satisfied. it remains to study the effect of $\sigma^{\rho,u}$ on the symplectic mapping $P_h(\gamma)(\tau)$. By the Jacobi equation, we have

$$P_h(\gamma)(\tau)(J(0), \dot J(0)) = (J(\tau), \dot J(\tau)),$$

where $J : [0,\tau] \to \mathbb{R}^m$ is solution to the Jacobi equation

$$\ddot J(t) + R^h(t) J(t) = 0 \qquad \forall t \in [0,\tau],$$

where $R^h(t)$ is the $m \times m$ symmetric matrix whose coefficients are given by (4.22). In other terms, $P_h(\gamma)(\tau)$ is equal to the $2m \times 2m$ symplectic matrix $X(\tau)$ given by the solution $X : [0,\tau] \to \mathrm{Sp}(m)$ at time τ of the following Cauchy problem (compare [62, Sect. 3.2] and [42]) :

$$\dot X(t) = A(t)X(t) + \sum_{i \le j = 1}^{m} u_{ij}(t) \mathcal{E}(ij) X(t) \quad \forall t \in [0,\tau], \quad X(0) = I_{2m}, \tag{4.24}$$

where the $2m \times 2m$ matrices $A(t), \mathcal{E}(ij)$ are defined by ($R(t)$ is the $m \times m$ symmetric matrix whose coefficients are given by (4.23))

$$A(t) := \begin{pmatrix} 0 & I_m \\ -R(t) & 0 \end{pmatrix} \qquad \forall t \in [0,\tau]$$

and

$$\mathcal{E}(ij) := \begin{pmatrix} 0 & 0 \\ E(ij) & 0 \end{pmatrix},$$

where the $E(ij), 1 \leq i \leq j \leq m$ are the symmetric $m \times m$ matrices defined by

$$\text{and} \quad (E(ij))_{k,l} = \delta_{ik}\delta_{jl} + \delta_{il}\delta_{jk} \qquad \forall i, j = 1, \ldots, m.$$

Since our control system has the form (4.1), all the results gathered in Section 4.2 apply. So, Theorem 4.1.1 will follow from Proposition 4.2.4. First by compactness of M and regularity of the geodesic flow, the compactness assumptions in Proposition 4.2.4 are satisfied. It remains to check that assumptions (4.11), (4.12) and (4.13) hold. First we check immediately that

$$\mathcal{E}(ij)\mathcal{E}(kl) = 0 \qquad \forall i, j, k, l \in \{1, \ldots, m\} \text{ with } i \leq j,\ k \leq l.$$

So, assumption (4.11) is satisfied. Since the $\mathcal{E}(ij)$ do not depend on time, we check easily that the matrices $B^0_{ij}, B^1_{ij}, B^2_{ij}$ associated to our system are given by (remember that we use the notation $[B, B'] := BB' - B'B$)

$$\begin{cases} B^0_{ij}(t) = B_{ij} := \mathcal{E}(ij) \\ B^1_{ij}(t) = [\mathcal{E}(ij), A(t)] \\ B^2_{ij}(t) = [[\mathcal{E}(ij), A(t)], A(t)], \end{cases}$$

for every $t \in [0, \tau]$ and any $i, j = 1, \ldots, m$ with $i \leq j$. An easy computation yields for any $i, j = 1, \ldots, m$ with $i \leq j$ and any $t \in [0, \tau]$,

$$B^1_{ij}(t) = [\mathcal{E}(ij), A(t)] = \begin{pmatrix} -E(ij) & 0 \\ 0 & E(ij) \end{pmatrix}$$

and

$$B^2_{ij}(t) = [[\mathcal{E}(ij), A(t)], A(t)] = \begin{pmatrix} 0 & -2E(ij) \\ -E(ij)R(t) - R(t)E(ij) & 0 \end{pmatrix}.$$

Then we get for any $i, j = 1, \ldots, m$ with $i \leq j$,

$$\left[B^1_{ij}(0), B_{ij}\right] = 2\begin{pmatrix} 0 & 0 \\ (E(ij))^2 & 0 \end{pmatrix} \in \operatorname{Span}\left\{B^0_{rs}(0) \,|\, r \leq s\right\}$$

and

$$\left[B^2_{ij}(0), B_{ij}\right] = 2\begin{pmatrix} -(E(ij))^2 & 0 \\ 0 & (E(ij))^2 \end{pmatrix} \in \operatorname{Span}\left\{B^1_{rs}(0) \,|\, r \leq s\right\}.$$

So assumption (4.12) is satisfied. It remains to show that (4.13) holds. We first notice that for any $i, j, k, l = 1, \ldots, m$ with $i \leq j, k \leq l$, we have

$$\begin{aligned}\left[B^1_{ij}(0), B^1_{kl}(0)\right] &= \Big[\left[\mathcal{E}(ij), A(0)\right], \left[\mathcal{E}(kl), A(0)\right]\Big] \\ &= \begin{pmatrix} [E(ij), E(kl)] & 0 \\ 0 & [E(ij), E(kl)] \end{pmatrix},\end{aligned}$$

with

$$[E(ij), E(kl)] = \delta_{il}F(jk) + \delta_{jk}F(il) + \delta_{ik}F(jl) + \delta_{jl}F(ik), \tag{4.25}$$

where $F(pq)$ is the $m \times m$ skew-symmetric matrix defined by

$$(F(pq))_{rs} := \delta_{rp}\delta_{sq} - \delta_{rq}\delta_{sp}.$$

It is sufficient to show that the space $S \subset M_{2m}(\mathbb{R})$ given by

$$S := \mathrm{Span}\Big\{B^0_{ij}(0), B^1_{ij}(0), B^2_{ij}(0), [B^1_{kl}(0), B^1_{rr'}(0)] \,|\, i, j, k, l, r, r'\Big\} \subset T_{I_{2m}}\mathrm{Sp}(m)$$

has dimension $p := 2m(2m+1)/2$. First since the set matrices $\mathcal{E}(ij)$ with $i, j = 1, \ldots, m$ and $i \leq j$ forms a basis of the vector space of $m \times m$ symmetric matrices $\mathcal{S}(m)$ we check easily by the above formulas that the vector space

$$S_1 := \mathrm{Span}\Big\{B^0_{ij}, B^2_{ij}(0) \,|\, i, j\Big\} = \mathrm{Span}\Big\{\mathcal{E}(ij), [[\mathcal{E}(ij), A(t)], A(t)] \,|\, i, j\Big\}$$

has dimension $2(m(m+1)/2) = m(m+1)$. We check easily that the vector spaces

$$S_2 := \mathrm{Span}\Big\{B^1_{ij}(0) \,|\, i, j\Big\} = \mathrm{Span}\Big\{[\mathcal{E}(ij), A(0)] \,|\, i, j\Big\}$$

and

$$S_3 := \mathrm{Span}\Big\{\left[B^1_{ij}(0), B^1_{kl}(0)\right] \,|\, i, j, k, l\Big\} = \mathrm{Span}\Big\{\Big[\left[\mathcal{E}(ij), A(0)\right], \left[\mathcal{E}(kl), A(0)\right]\Big] \,|\, i, j, k, l\Big\}$$

are orthogonal to S_1 with respect to the scalar product $P \cdot Q = \mathrm{tr}(P^*Q)$. So, we need to show that $S_2 + S_3$ has dimension $p - m(m+1) = m^2$. By the above formulas, we have

$$S_2 := \mathrm{Span}\left\{\begin{pmatrix} -E(ij) & 0 \\ 0 & E(ij) \end{pmatrix} \,|\, i, j\right\}$$

and

$$S_3 := \mathrm{Span}\left\{\begin{pmatrix} [E(ij), E(kl)] & 0 \\ 0 & [E(ij), E(kl)] \end{pmatrix} \,|\, i, j, k, l\right\},$$

and in addition S_2 and S_3 are orthogonal. The first space S_2 has the same dimension as $\mathcal{S}(m)$, that is $m(m+1)/2$. Moreover, by (4.25) for every $i \neq j$, $k = i$, and $l \notin \{i, j\}$, we have

$$[E(ij), E(kl)] = F(jl).$$

The space spanned by the matrices of the form

$$\begin{pmatrix} F(jl) & 0 \\ 0 & F(jl) \end{pmatrix},$$

with $1 \leq j < l \leq m$ has dimension $m(m-1)/2$. This shows that S_3 has dimension at least $m(m-1)/2$ and so $S_2 \oplus S_3$ has dimension m^2. This concludes the proof of Theorem 4.1.1.

4.4 Proofs of Theorems 4.1.2 and 4.1.3

Let us start with the proof of Theorem 4.1.2, namely, if the periodic orbits of the geodesic flow of a smooth compact manifold (M, g) of dimension ≥ 2 are C^2-persistently hyperbolic from Mañé's viewpoint then the closure of the set of periodic orbits is a hyperbolic set. Recall that an invariant set Λ of a smooth flow $\psi_t : Q \longrightarrow Q$ acting without singularities on a complete manifold Q is called hyperbolic if there exist constants, $C > 0$, $\lambda \in (0, 1)$, and a direct sum decomposition $T_pQ = E^s(p) \oplus E^u(p) \oplus X(p)$ for every $p \in \Lambda$, where $X(p)$ is the subspace tangent to the orbits of ψ_t, such that

1. $\| D\psi_t(W) \| \leq C\lambda^t \| W \|$ for every $W \in E^s(p)$ and $t \geq 0$,
2. $\| D\psi_t(W) \| \leq C\lambda^{-t} \| W \|$ for every $W \in E^u(p)$ and $t \leq 0$.

In particular, when the set Λ is the whole Q the flow is called Anosov. The proof follows the same steps of the proof of Theorem B in [64] where the same conclusion is obtained supposing that the geodesic flow is C^1 persistently expansive in the family of Hamiltonian flows.

4.4.1 Dominated splittings and hyperbolicity

Let $F^2(M, g)$ be the set of Riemannian metrics in M conformal to (M, g) endowed with the C^2 topology such that all closed orbits of their geodesic flows are hyperbolic. The first step of the proof of Theorem 4.1.2 is closely related with the notion of dominated splitting introduced by Mañé.

Definition 4.4.1 *Let $\phi_t : Q \longrightarrow Q$ be a smooth non-singular flow acting on a complete Riemannian manifold Q and let $\Omega \subset Q$ be an invariant set. We say that*

Ω has a dominated splitting in Ω if there exist constants $\delta \in (0,1)$, $m > 0$, and invariant subspaces $S(\theta), U(\theta)$ in $T_\theta\Omega$ such that for every $\theta \in \Omega$,

1. *If $X(\theta)$ is the unit vector tangent to the flow then $S(\theta) \oplus U(\theta) \oplus X(\theta) = T_\theta Q$,*
2. *$\| D_\theta \phi_m|_{S(\theta)} \| \cdot \| D_{\phi_m(\theta)}\phi_{-m}|_{U(\phi_m(\theta)} \| \leq \delta$.*

The invariant splitting of an Anosov flow is always dominated, but the converse may not be true in general. However, for geodesic flows the following statement holds

Theorem 4.4.2 *Any continuous, Lagrangian, invariant, dominated splitting in a compact invariant set for the geodesic flow of a smooth compact Riemannian manifold is a hyperbolic splitting. Therefore, the existence of a continuous Lagrangian invariant dominated splitting in the whole unit tangent bundle is equivalent to the Anosov property in the family of geodesic flows.*

This statement is proved in [64] not only for geodesic flows but for symplectic diffeomorphisms. Actually, the statement extends easily to a Hamiltonian flow in a nonsingular energy level (see also Contreras [11]). The following step of the proof of Theorem 4.1.2 relies on the connection between persistent hyperbolicity of periodic orbits and the existence of invariant dominated splittings. One of the most remarkable facts about Mañé's work about the stability conjecture (see Proposition II.1 in [46]) is to show that persistent hyperbolicity of families of linear maps is connected to dominated splittings, the proof is pure generic linear algebra (see Lemma II.3 in [46]). Then Mañé observes that Franks' Lemma allows to reduce the study of persistently hyperbolic families of periodic orbits of diffeomorphisms to persistently hyperbolic families of linear maps. Let us explain briefly Mañé's result and see how its combination with Franks' Lemma for geodesic flows implies Theorem 4.1.2. Let $GL(n)$ be the group of linear isomorphisms of $\mathbb{R}^n$. Let $\psi : \mathbb{Z} \longrightarrow GL(n)$ be a sequence of such isomorphisms, we denote by $E^s_j(\psi)$ the set of vectors $v \in \mathbb{R}^n$ such that

$$\sup_{n\geq 0}\Big\{ \big\| (\Pi_{i=0}^n \psi_{j+i})\, v \big\| \Big\} < \infty,$$

and by $E^u_j(\psi)$ the set of vectors $v \in \mathbb{R}^n$ such that

$$\sup_{n\geq 0}\Big\{ \big\| (\Pi_{i=0}^n \psi_{j-1-i})^{-1}\, v \big\| \Big\} < \infty.$$

Let us say that the sequence ψ is hyperbolic if $E^s_j(\psi) \bigoplus E^u_j(\psi) = \mathbb{R}^n$ for every $j \in \mathbb{Z}$. Actually, this definition is equivalent to require the above direct sum decomposition for some j. A periodic sequence ψ is characterized by the existence of $n_0 > 0$ such that $\psi_{j+n_0} = \psi_j$ for every j. It is easy to check that the hyperbolicity of a periodic

sequence ψ is equivalent to the classical hyperbolicity of the linear map $\prod_{j=0}^{n_0-1}\psi_j$. Now, let

$$\left\{\psi^\alpha, \alpha \in \Lambda\right\}$$

be a family of periodic sequences of linear maps indexed in a set Λ. Let us define the distance $d(\psi,\eta)$ between two families of periodic sequences indexed in Λ by

$$d(\psi,\eta) = \sup_{n\in\mathbb{Z},\alpha\in\Lambda}\left\{\| \psi_n^\alpha - \eta_n^\alpha \|\right\}.$$

We say that the family $\{\psi^\alpha, \alpha \in \Lambda\}$ is hyperbolic if every sequence in the family is hyperbolic. Let us call by periodically equivalent two families ψ^α, η^α for which given any α, the minimum periods of ψ^α and η^α coincide. Following Mañé, we say that the family $\{\psi^\alpha, \alpha \in \Lambda\}$ is uniformly hyperbolic if there exists $\epsilon > 0$ such that every periodically equivalent family η^α such that $d(\psi,\eta) < \epsilon$ is also hyperbolic. The main result concerning uniformly hyperbolic families of linear maps is the following symplectic version of Lemma II.3 in [46].

Theorem 4.4.3 *Let $\{\psi^\alpha, \alpha \in \Lambda\}$ be a uniformly hyperbolic family of periodic linear sequences of symplectic isomorphisms of $\mathbb{R}^n$. Then there exist constants $K > 0$, $m \in \mathbb{N}$, and $\lambda \in (0,1)$ such that :*

1. *If $\alpha \in \Lambda$ and ψ^α has minimum period $n \geq m$, then*

$$\prod_{j=0}^{k-1}\left\|(\Pi_{i=0}^{m-1}\psi_{mj+i}^\alpha)|_{E_{mj}^s(\psi^\alpha)}\right\| \leq K\lambda^k,$$

   and

$$\prod_{j=0}^{k-1}\left\|(\Pi_{i=0}^{m-1}\psi_{mj+i}^\alpha)^{-1}|_{E_{mj}^u(\psi^\alpha)}\right\| \leq K\lambda^k,$$

   where k is the integer part of $\frac{n}{m}$.

2. *For all $\alpha \in \Lambda$, $j \in \mathbb{Z}$,*

$$\left\|(\Pi_{i=0}^{m-1}\psi_{j+i}^\alpha)|_{E_j^s(\psi^\alpha)}\right\| \cdot \left\|(\Pi_{i=0}^{m-1}\psi_{j+i}^\alpha)^{-1}|_{E_j^u(\psi^\alpha)}\right\| \leq \lambda.$$

3. *For every $\alpha \in \Lambda$*

$$\limsup_{n\to+\infty}\frac{1}{n}\sum_{j=0}^{n-1}\ln\left(\left\|(\Pi_{i=0}^{m-1}\psi_{mj+i}^\alpha)|_{E_{mj}^s(\psi^\alpha)}\right\|\right) < 0$$

   and

$$\limsup_{n\to+\infty}\frac{1}{n}\sum_{j=0}^{n-1}\ln\left(\left\|(\Pi_{i=0}^{m-1}\psi_{mj+i}^\alpha)^{-1}|_{E_{m(j+1)}^u(\psi^\alpha)}\right\|\right) < 0.$$

At the end of the section we shall give an outline of the proof of Theorem 4.4.3 based on Mañé's Lemma II.3 in [46] which is proved for linear isomorphisms without the symplectic assumption. Now, we are ready to combine Franks' Lemma from Mañé's viewpoint and Theorem 4.4.3 to get a geodesic flow version of Theorem 4.4.3.

Lemma 4.4.4 *Let (M, g) be a compact Riemannian manifold. Then there exists $T_g > 0$ such that every closed geodesic has period greater than T_g.*

The proof is more or less obvious from the flowbox lemma since the geodesic flow has no singularities and the unit tangent bundle of (M, g) is compact.
Let $\mathrm{Per}(g)$ be the set of periodic points of the geodesic flow of (M, g). Given a periodic point $\theta \in \mathrm{Per}(g)$ with period $T(\theta)$, consider a family of local sections Σ_i^θ, $i = 0, 1, .., k_\theta = [\frac{T(\theta)}{T_g}]$, where $[\frac{T(\theta)}{T_g}]$ is the integer part of $\frac{T(\theta)}{T_g}$, with the following properties :

1. Σ_i^θ contains the point $\phi_{iT_g}(\theta)$ for every $i = 0, 1, .., k_\theta - 1$,
2. Σ_i^θ is perpendicular to the geodesic flow at $\phi_{iT_g}(\theta)$ for every i.

Let us consider the sequence of symplectic isomorphisms

$$\psi_{\theta,g} = \Big\{A_{\theta,i,g},\, i \in \mathbb{Z}\Big\}$$

1. For $i = nk_\theta + s$, where $n \in \mathbb{Z}$, $0 \leq s < k_\theta - 1$, let

$$A_{\theta,i,g} = D_{\phi_{sT_g}(\theta)}\phi_{T_g} : T_{\phi_{sT_g}(\theta)}\Sigma_s^\theta \longrightarrow T_{\phi_{(s+1)T_g}(\theta)}\Sigma_{s+1}^\theta,$$

2. For $i = nk_\theta - 1$, where $n \in \mathbb{Z}$, let

$$A_{\theta,i,g} = D_{\phi_{(k_\theta-1)T_g}(\theta)}\phi_{T_g+r_\theta} : T_{\phi_{(k_\theta-1)T_g}(\theta)}\Sigma_{(k_\theta-1)}^\theta \longrightarrow T_\theta\Sigma_0^\theta$$

   where $T(\theta) = k_\theta T_g + r_\theta$.

Notice that the sequence $\psi_{\theta,g}$ is periodic and let

$$\psi_g = \Big\{\psi_{\theta,g}, \theta \in \mathrm{Per}(g)\Big\}.$$

The family ψ_g is a collection of periodic sequences, and by Franks' Lemma from Mañé's viewpoint (Theorem 4.1.1) we have

Lemma 4.4.5 *Let (M, g) be a compact Riemannian manifold. If (M, g) is in the interior of $F^2(M, g)$ then the family ψ_g is uniformly hyperbolic.*

Proof of lemma 4.4.5 : Let $\delta_{T_g} > 0$, K_{T_g}, be given in Franks' Lemma, Theorem 4.1.1. If (M, g) is in the interior of $F^2(M, g)$ then there exists an open C^2 neighborhood U of (M, g) in the set of metrics which are conformally equivalent to (M, g) such that every closed orbit of the geodesic flow of $(M, h) \in U$ is hyperbolic. In particular, given a periodic point $\theta \in T_1M$ for the geodesic flow of (M, g), the set of metrics $(M, h_\theta) \in U$ for which the orbit of θ is still a periodic orbit for the geodesic flow of (M, h_θ) have the property that this orbit is hyperbolic as well for the h_θ-geodesic flow. By Theorem 4.1.1, for any $\delta \in (0, \delta_{T_g})$, the $(K_{T_g}\sqrt{\delta})$-C^2 open neighborhood of the metric (M, g) in the set of its conformally equivalent metrics covers a δ-open neighborhood of symplectic linear transformations of the derivatives of the Poincaré maps between the sections Σ_s^θ, Σ_{s+1}^θ defined above. Then consider $\delta > 0$ such that the $(K_{T_g}\sqrt{\delta})$-C^2 open neighborhood of the metric (M, g) is contained in U, and we get that the family $A_{\theta,i,g}$ is uniformly hyperbolic. Since this holds for every periodic point θ for the geodesic flow of (M, g) the family ψ_g is uniformly hyperbolic. □

Therefore, applying Theorem 4.4.3 to the sequence ψ_g we obtain,

Theorem 4.4.6 *Suppose that there exists an open neighborhood $V(\epsilon)$ of (M, g) in $F^2(M, g)$. Then there exist constants $K > 0$, $D \geq T_g$, $\lambda \in (0, 1)$ such that :*

1. *For every periodic point θ with minimum period $\omega \geq D$, we have*

$$\prod_{i=0}^{k-1} \| D\phi_D|_{E^s(\phi_{iD}(\theta)} \| \leq K\lambda^k$$

and

$$\prod_{i=0}^{k-1} \| D\phi_{-D}|_{E^u(\phi_{-iD}(\theta)} \| \leq K\lambda^k,$$

where $E^s(\tau) \oplus E^u(\tau) = N_\tau$ is the hyperbolic splitting of the geodesic flow of (M, g) at a periodic point τ and $k = [\frac{\omega}{D}]$.

2. *There exists a continuous Lagrangian, invariant, dominated splitting*

$$T_\theta T_1 M = G^s(\theta) \oplus G^u(\theta) \oplus X(\theta)$$

in the closure of the set of periodic orbits of ϕ_t which extends the hyperbolic splitting of periodic orbits : if θ is periodic then $G^s(\theta) = E^s(\theta)$, $G^u(\theta) = E^u(\theta)$.

Theorem 4.4.6 improves Theorem 2.1 in [64] where the same conclusions are claimed assuming that the geodesic flow of (M, g) is in the C^1 interior of the set of Hamiltonian flows all of whose periodic orbits are hyperbolic. Hence, the proof of Theorem 4.1.2 follows from the combination of Theorems 4.4.2 and Theorem 4.4.6.

4.4.2 Proof of Theorem 4.1.3

Let $E^2(M,g)$ be the set of Riemannian metrics in M conformally equivalent to (M,g), endowed with the C^2 topology, whose geodesic flows are expansive. The main result of the subsection is an improved version of Proposition 1.1 in [64].

Theorem 4.4.7 *The interior of $E^2(M,g)$ is contained in $F^2(M,g)$.*

We just give an outline of the proof based on [64]. The argument is by contradiction. Suppose that there exists (M,h) in the interior of $E^2(M,g)$ whose geodesic flow has a nonhyperbolic periodic point θ. Let Σ be a cross section of the geodesic flow at θ tangent to N_θ. The derivative of the Poincaré return map has some eigenvalues in the unit circle. By the results of Rifford-Ruggiero [62] DP every generic property in the symplectic group is attained by C^2 perturbations by potentials of (M,h) preserving the orbit of θ. This means that there exists $(M,\bar{h})$ C^2-close to (M,h) and conformally equivalent to it such that the orbit of θ is still a periodic orbit of the geodesic flow of $(M,\bar{h})$ and the derivative of the Poincaré map $\bar{P}:\Sigma\longrightarrow\Sigma$ has generic unit circle eigenvalues. By the central manifold Theorem of Hirsch-Pugh-Shub [34] there exists a central invariant submanifold $\Sigma_0\subset\Sigma$ such that the return map P_0 of the geodesic flow of $(M,\bar{h})$ is tangent to the invariant subspace associated to the eigenvalues of $D\bar{P}$ in the unit circle. Moreover, we can suppose by the C^k Mañé-generic version of the Klingenberg-Takens Theorem due to Carballo-Gonçalves [9] that the Birkhoff normal form of the Poincaré map at the periodic point θ is generic. So we can apply the Birkhoff-Lewis fixed point Theorem due to Moser [51] to deduce that given $\delta>0$ there exists infinitely many closed orbits of the geodesic flow of $(M,\bar{h})$ in the δ-tubular neighborhood of the orbit of θ. This clearly contradicts the expansiveness of the geodesic flow of $(M,\bar{h})\in E^2(M,g)$.
In the case where (M,g) is a closed surface, we know that the expansiveness of the geodesic flow implies the density of the set of periodic orbits in the unit tangent bundle (see [64] for instance). So if (M,g) is in the interior of $E^2(M,g)$ the closure of the set of periodic orbits is a hyperbolic set by Theorem 4.1.2, and since this set is dense its closure is the unit tangent bundle and therefore, the geodesic flow is Anosov. If the dimension of M is arbitrary, then we know that if (M,g) has no conjugate points, the expansiveness of the geodesic flow implies the density of periodic orbits as well, so we can extend the above result for surfaces.

4.4.3 Main ideas to show Theorem 4.4.3

As mentioned before, Theorem 4.4.3 is a symplectic version of Lemma II.3 in [46] that is proved for general families of periodic sequences of linear isomorphisms of $\mathbb{R}^n$. Theorem 4.4.3 has been already used in [64], and since there is no written

proof in the literature we would like to give a sketch of proof for the sake of completeness. We shall not repeat all the steps of the proof of Lemma II.3 in [46] because the arguments extend quite forwardly, we shall just point out where the symplectic assumption matters. The proof of Lemma II.3 in [46] has two main parts. The first part is based on the generic linear algebra of what Mañé calls uniformly contracting families of periodic sequences of linear isomorphisms, namely, uniformly hyperbolic families of periodic sequences where the unstable part of each sequence is trivial (see [46] from pages 527 to 532). Since the restriction of the dynamics of a uniformly hyperbolic periodic sequence to the stable subspace gives rise to a uniformly contracting periodic sequence the argument consists in proving separatedly uniform contraction properties for the stable part of the dynamics and then uniform expansion properties for the unstable part of the dynamics. In the case of hyperbolic symplectic matrices, the invariant subspaces of the dynamics are always Lagrangian, so we have the following elementary result of symplectic linear algebra :

Lemma 4.4.8 *Given a symplectic matrix S and a Lagrangian invariant subspace L there exists an unitary matrix U such that*

1. *$S = U^T Y U$ where Y is a $2n \times 2n$ symplectic matrix formed by $n \times n$ blocks of the form*
$$Y = \begin{pmatrix} A & B \\ 0 & (A^T)^{-1} \end{pmatrix},$$
where A^T is the adjoint of A.
2. *The matrix A represents the restriction of S to L.*

Now, symplectic matrices in $n \times n$ blocks can be characterized in terms of certain algebraic properties of their blocks.

Lemma 4.4.9 *Let*
$$S = \begin{pmatrix} A & B \\ C & D \end{pmatrix}$$
be a $2n \times 2n$ matrix where A, B, C, D are $n \times n$ blocks. The matrix S is symplectic if and only if

1. *$A^T D - C^T B = I$*
2. *The matrices $B^T D$ and $A^T C$ are symmetric.*

So any matrix
$$M = \begin{pmatrix} A & B \\ 0 & D \end{pmatrix}$$
formed by $n \times n$ blocks $A, B, 0, D$ is symplectic if and only if $D = (A^T)^{-1}$ and $B^T D$ is symmetric .

Hence, to extend to the symplectic case Mañé's generic linear algebra arguments for uniformly contracting families of periodic isomorphisms one can consider the family of restrictions of hyperbolic symplectic matrices to their stable subspaces. This family is represented by a family of uniformly contracting periodic $n \times n$ linear isomorphisms $\psi = \{A^\alpha, \alpha \in \Lambda\}$ placed in the upper left block of the differentials of Poincaré maps according to Lemma 4.4.8. Then observe that any open neighborhood of the family ψ according to the distance $d(\psi, \eta)$ can be embedded in a neighborhood of a family of symplectic isomorphisms just by applying Lemma 4.4.9. We can build a symplectic family of symplectic isomorphisms from a perturbation $\tilde{A}^\alpha$ of A^α taking $\tilde{D} = (\tilde{A}^T)^{-1}$ and finding $\tilde{B}$ close to B such that $\tilde{B}^T\tilde{D}$ is symmetric. Such matrix $\tilde{B}$ exists because the set of symmetric matrices is a submanifold of the set of matrices, and $B^T\tilde{D}$ is close to the symmetric matrix B^TD. So there exists $\epsilon > 0$ such that the ball V_ϵ of radius ϵ of matrices centered at $B^T\tilde{D}$ meets the submanifold of symmetric matrices in an open (relative) neighborhood of B^TD . But the multiplication of an open neighborhood $V(B^T)$ of B^T by $\tilde{D}$ gives an open neighborhood of $B^T\tilde{D}$ in the set of matrices. Then for a suitable choice of $V(B^T)$ we have that $V(B^T)D$ contains a matrix $\tilde{B}^T\tilde{D}$ that is symmetric.
Therefore, Mañé's arguments for uniformly contracting families can be extended to the symplectic category. Finally, let us remark that the symplectic nature of the family implies that contraction properties of the norm of the restriction to the stable part under the action of the dynamics already give expansion properties for the action of the dynamics on the norm of the restriction to the unstable part. This yields that it is enough to consider the contracting part of the dynamics of a symplectic family of periodic linear isomorphisms to extend the first part of the proof of Lemma II.3 in [46] to such families.
The second part of the proof deals with the angle between the invariant subspaces of uniformly hyperbolic families (see [46] pages 532-540).

Definition 4.4.10 *Given two subspaces $E, S \subset \mathbb{R}^n$ such that $E \bigoplus S = R^n$, let $\measuredangle(E, S)$ be defined by*

$$\measuredangle(E, S) = \| L \|^{-1}$$

where $L : E^\perp \longrightarrow E$ is such that $S = \{v + L(v), v \in E^\perp\}$. In particular, $\measuredangle(E, E^\perp) = \infty$.

The main goal of this part of the proof of Lemma II.3 in [46] is to show that the invariant splitting of a uniformly hyperbolic family is a continuous dominated splitting. The general idea of the proof of this second part is to "move" one of the invariant subspaces of the dynamics with perturbations of the map L while keeping the other subspace unchanged.
The proof of the continuous domination has two steps. First of all, so show that the angle between the invariant subspaces must be bounded below by a positive constant

(Lemma II.9 in [46] pages 532 to 534). This is the content of the following result whose proof we present in detail to give a sample of how the arguments extend to symplectic matrices. We just follow step by step Mañé's proof, we even respect the notations in his paper.

Lemma 4.4.11 *Let $\{\psi^\alpha, \alpha \in \Lambda\}$ be a uniformly hyperbolic family of periodic sequences of symplectic isomorphisms of $\mathbb{R}^{2n}$. Then, there exist $\epsilon > 0$, $\gamma > 0$, and $n_0 \in \mathbb{Z}^-$ such that if $\{\eta^\alpha, \alpha \in \Lambda\}$ is a periodically equivalent family with $d(\psi, \eta) < \epsilon$ then $\{\eta^\alpha, \alpha \in \Lambda\}$ is hyperbolic and the angle between stable and unstable subspaces satisfies*

$$\measuredangle(E_0^s(\eta^\alpha), E_0^u(\eta^\alpha)) > \gamma$$

for every $\alpha \in \Lambda$ such that the minimum period of η^α is greater than n_0.

Proof of lemma 4.4.11 : Suppose by contradiction that the statement is false. Then there would exist hyperbolic periodic sequences $\eta : \mathbb{Z} \longrightarrow Sp(2n, \mathbb{R})$ with arbitrarily large period n, such that

1. $\measuredangle(E_0^s(\eta^\alpha), E_0^u(\eta^\alpha))$ is arbitrarily small,
2. For some $\alpha \in \Lambda$ the periods of ψ^α and η coincide,
3. $\sup_i \parallel \eta_i - \psi_i^\alpha) \parallel$ is arbitrarily small.

Suppose that in the coordinates of the base $E_0^s(\eta)^\perp \bigoplus E_0^s(\eta)$ the matrix of $\prod_{j=0}^{n-1} \eta_j$ is

$$M = \begin{pmatrix} A & 0 \\ P & B \end{pmatrix}$$

where A, P, B are $n \times n$ matrices. By the uniform contraction property of the stable part of the dynamics of the family there exist $K > 0$, $\lambda \in (0, 1)$ such that

$$\parallel A^{-1} \parallel \leq K\lambda^n$$

and

$$\parallel B \parallel \leq K\lambda^n.$$

Since we can choose an orthogonal change of coordinates Q, we have that the matrix $M = QA$ is a symplectic matrix and thus, by Lemma 4.4.8 we get $B = (A^T)^{-1}$.

Let $L : E_0^s(\eta)^\perp \longrightarrow E_0^s(\eta)$ be such that $\{v + L(v), v \in E_0^s(\eta)^\perp\} = E_0^u(\eta)$. Since $\prod_{j=0}^{n-1} \eta_j(E_0^u(\eta)) = E_0^u(\eta)$ we get

$$LA = P + BL,$$

and therefore,

$$L = PA^{-1} + BLA^{-1}$$

and by the previous inequalities

$$\| L \| \leq \| PA^{-1} \| + K^2\lambda^{2n} \| L \| .$$

For n large enough, $K^2\lambda^{2n} \leq \frac{1}{2}$, so we have

$$\frac{1}{2} \| PA^{-1} \|^{-1} \leq \| L \|^{-1} = \measuredangle(E_0^s(\eta^\alpha), E_0^u(\eta^\alpha)),$$

and hence the number $\| PA^{-1} \|^{-1}$ assumes arbitrarily small values by the contradiction assumption.

Next, define a sequence $\xi : \mathbb{Z} \longrightarrow Sp(2n, \mathbb{R})$ with minimum period n, where

1. $\xi_i = \eta_i$ for every $0 < i \leq n-1$,
2. $\xi_0 = \eta_0 \begin{pmatrix} I & C \\ 0 & I \end{pmatrix}$.

The matrix $\begin{pmatrix} I & C \\ 0 & I \end{pmatrix}$ is symplectic for every C such that C is symmetric by Lemma 4.4.9. Then,

$$\prod_{i=0}^{n-1} \xi_i = \begin{pmatrix} A & 0 \\ P & B \end{pmatrix} \begin{pmatrix} I & C \\ 0 & I \end{pmatrix} = \begin{pmatrix} A & AC \\ P & B + PC \end{pmatrix}.$$

So the goal is to find a symmetric matrix C with small norm such that the above matrix has an eigenvalue equal to 1. In this way we get a contradiction because we are supposing that the family $\{\psi^\alpha, \alpha \in \Lambda\}$ is uniformly hyperbolic so any sufficiently close family would have to be as well.

To find the matrix C let us consider the system

$$\begin{cases} Ax + ACy & = & x \\ Px + (PC + B)y & = & y. \end{cases}$$

For a solution (x, y) of the system we would have

$$x = (I - A)^{-1}ACy = -(I - A^{-1})-1Cy$$

and

$$(I - B)^{-1}P(I - (I - A^{-1})^{-1})Cy = y.$$

Notice that $I - (I - A^{-1})^{-1} = -A^{-1}(I - A^{-1})^{-1}$, so we get

$$-(I - B)^{-1}PA^{-1}(I - A^{-1})^{-1}Cy = y.$$

Take a vector v such that $\| v \| = \| PA^{-1} \|^{-1}$, and $\| PA^{-1}v \| = 1$. Let

$$y = -(I - B)^{-1}PA^{-1}v.$$

Since $\| B \| \leq K\lambda^n$ we can assume that $\| I - B \| \leq 2$. Hence $\| y \|^{-1} \leq 2$. Now take a vector w such that

$$(I - A^{-1})^{-1} w = v.$$

Since the norm of A^{-1} is small the matrix $(I - A^{-1})$ is close to the identity, so we can suppose that $\| w \| \leq 2 \| v \|$. Next, consider a matrix C such that

$$Cy = w, \quad \| C \| = \frac{\| w \|}{\| y \|}.$$

Observe that

$$\| C \| \leq 4 \| v \| = 4 \| PA^{-1} \|^{-1} \leq 2\measuredangle(E_0^s(\eta^\alpha), E_0^u(\eta^\alpha))$$

that can be made arbitrarily small. Thus, the matrix C and the vector y defined above give a fixed point (x, y) for the matrix $\begin{pmatrix} A & AC \\ P & B + PC \end{pmatrix}$ which shows that the sequence ξ_i is not hyperbolic.

Notice that the conditions defining C are quite loose, there are many possible candidates. In particular, the matrix C can be taken symmetric. Indeed, symmetric matrices are linear maps which send the unit sphere to ellipsoids centered at 0. Moreover, the norm of such a map is the length of the largest axis of the corresponding ellipsoid. So let us consider a linear map T such that $T(y) = w$ as the linear map C does, and take T such that

1. The image of the unit vector $\frac{y}{\|y\|}$ by T is $\frac{w}{\|y\|}$.
2. The image of the unit sphere by T is an ellipsoid whose largest axis is contained in the line tw, $t \in \mathbb{R}$, and whose length is $\frac{\|w\|}{\|y\|}$.

If we take $C = T$ we have a symmetric matrix solving the above system of equations. □

The final step of the second part of the proof is to show that the uniform hyperbolicity of families combined with the existence of a lower bound for the angle between invariant subspaces implies the domination condition ([46] pages 534-540). The argument is by contradiction : if the domination condition is not satisfied then it is possible to find a small perturbation of the family such that the invariant subspaces of the perturbed one are very close to each other, which is impossible by Lemma 4.4.11. The proof is involved but again, the tools of the proof are quite general and elementary in linear algebra, they can be adapted straighforwardly to symplectic matrices.

4.5 Appendix : Proof of Lemma 4.2.10

First of all, we observe that given $L^N_{\bar{i},\bar{j}}$, the existence of $K(N)$ follows by homogeneity and continuity of the mapping

$$v \in L^N_{\bar{i},\bar{j}} \longmapsto \big(tv_{\bar{i}}\big) \odot \big(sv_{\bar{j}}\big) \in \mathbb{R}.$$

Let us now demonstrate the existence of $L^N_{\bar{i},\bar{j}}$ by induction over N. In fact, setting $f = v_{\bar{i}}, g = v_{\bar{j}}$, it is sufficient to show that the set $\mathcal{L}$ of $w = (f,g) \in L^2([0,1];\mathbb{R}^2)$ with f and g polynomials satisfying

$$\left\{\begin{array}{rcl} \int_0^1 f(s)ds & = & 0 \\ \int_0^1 sf(s)ds & = & 0 \\ \int_0^1 g(s)ds & = & 0 \\ \int_0^1 sg(s)ds & = & 0 \\ f \odot (sg) & = & 0 \\ g \odot (sf) & = & 0 \\ f \odot (s^2 g) & = & 0 \\ g \odot (s^2 f) & = & 0 \end{array}\right. \tag{4.26}$$

and

$$(tf) \odot (sg) \neq 0 \tag{4.27}$$

contains (adding the origin) vector spaces L^N of any dimension. When f, g are polynomials, that is of the form

$$f(t) = \sum_{p\in\mathbb{Z}} a_p t^p \quad \text{and} \quad g(t) = \sum_{q\in\mathbb{Z}} b_q t^q$$

with $a_p = b_q = 0$ for any $p, q < 0$ and $a_p = b_q = 0$ for large p, q, we check easily that (from now on, we omit to write the set $\mathbb{Z}$ containing p and q)

$$f \odot g = \sum_{p,q} \alpha_{p,q} a_p\, b_q,$$

with $1/\alpha_{p,q} = (q+1)(p+q+2)$. Then we have

$$\begin{cases} \int_0^1 f(s)ds &= \sum_p \frac{1}{p+1}\, a_p \\ \int_0^1 sf(s)ds &= \sum_p \frac{1}{p+2}\, a_p \\ \int_0^1 g(s)ds &= \sum_q \frac{1}{q+1}\, b_q \\ \int_0^1 sg(s)ds &= \sum_q \frac{1}{q+2}\, b_q \\ f \odot (sg) &= \sum_{p,q} \alpha_{p,q} a_p\, b_{q-1} \\ f \odot (s^2 g) &= \sum_{p,q} \alpha_{p,q} a_p\, b_{q-2} \\ g \odot (sf) &= \sum_{p,q} \alpha_{q,p} a_{p-1}\, b_q \\ g \odot (s^2 f) &= \sum_{p,q} \alpha_{q,p} a_{p-2}\, b_q, \end{cases}$$

and

$$(tf) \odot (sg) = \sum_{p,q} \alpha_{p,q} a_{p-1}\, b_{q-1}.$$

We can now show that the set $\mathcal{L} \cup \{0\}$ contains a vector line. As a matter of fact, taking $f(t) = 1 - 6t + 6t^2$ and taking g in the set of polynomial of degree $\leq d$, leads to the system

$$\begin{cases} \sum_q \frac{1}{q+1}\, b_q &= 0 \\ \sum_q \frac{1}{q+2}\, b_q &= 0 \\ \sum_q (\alpha_{0,q} - 6\alpha_{1,q} + 6\alpha_{2,q})\, b_{q-1} = \sum_q \frac{q+1}{(q+3)(q+4)(q+5)}\, b_q &= 0 \\ \sum_q (\alpha_{0,q} - 6\alpha_{1,q} + 6\alpha_{2,q})\, b_{q-2} = \sum_q \frac{q+2}{(q+4)(q+5)(q+6)}\, b_q &= 0 \\ \sum_q (\alpha_{q,1} - 6\alpha_{q,2} + 6\alpha_{q,3})\, b_q = -\sum_q \frac{q+2}{(q+3)(q+4)(q+5)}\, b_q &= 0 \\ \sum_q (\alpha_{q,2} - 6\alpha_{q,3} + 6\alpha_{q,4})\, b_q = \frac{1}{30}\sum_q \frac{q^2-16q-60}{(q+4)(q+5)(q+6)}\, b_q &= 0, \end{cases} \tag{4.28}$$

which is the system of equations of the intersection of 6 hyperplans H_1, H_2, H_3, H_4, H_5 and H_6 respectively, that we denote by

$$V := \cap_{i=1}^6 H_i \subset \mathbb{R}_d[X].$$

Then V has dimension at least $d-5$. We can check with Maple that there is a $\bar{d} \in \mathbb{N}$ sufficiently large such that V is not contained in the kernel of the linear form

$$\phi : (b_q) \in \mathbb{R}_{\bar{d}}[X] \mapsto \sum_q \frac{q+3}{(q+4)(q+5)(q+6)}\, b_q.$$

For every $i = 1, ..., 6$, let ϕ_i be the linear form correspoding to the i-th line in (4.28) and denote by $A(d)$ the $7 \times (d+1)$ matrix whose seven lines are given by the

coeficients of ϕ_1, ϕ_2, ϕ_3, ϕ_4, ϕ_5, ϕ_6 and ϕ respectively, that is

$$A(d) := \begin{pmatrix} 1 & \frac{1}{2} & \cdots & \frac{1}{d} & \frac{1}{d+1} \\ \frac{1}{2} & \frac{1}{3} & \cdots & \frac{1}{d+1} & \frac{1}{d+2} \\ \frac{1}{60} & \frac{1}{60} & \cdots & \frac{d}{(d+2)(d+3)(d+4)} & \frac{d+1}{(d+3)(d+4)(d+5)} \\ \frac{1}{60} & \frac{1}{70} & \cdots & \frac{d+1}{(d+3)(d+4)(d+5)} & \frac{d+2}{(d+4)(d+5)(d+6)} \\ \frac{1}{30} & \frac{1}{40} & \cdots & \frac{d+1}{(d+2)(d+3)(d+4)} & \frac{d+2}{(d+3)(d+4)(d+5)} \\ \frac{-1}{2} & \frac{-5}{14} & \cdots & \frac{(d-1)^2-16(d-1)-60}{(d+3)(d+4)(d+5)} & \frac{d^2-16d-60}{(d+4)(d+5)(d+6)} \\ \frac{1}{40} & \frac{2}{105} & \cdots & \frac{d+2}{(d+3)(d+4)(d+5)} & \frac{d+3}{(d+4)(d+5)(d+6)} \end{pmatrix}.$$

We check with Maple that $\operatorname{rank}\big(A(50)\big) = 7$, which shows that $\phi \notin \operatorname{Span}(\phi_1, ..., \phi_6)$, and in turn that $V \not\subset \operatorname{Ker}(\phi)$. Therefore there is a solution $(b_q) \in \mathbb{R}_{50}[X]$ of the above system which satisfies

$$\left(f(t) = 1 - 6t + 6t^2\right) \odot \left(g(t) = \sum_q b_q t^q\right) = \sum_q \frac{q+3}{(q+4)(q+5)(q+6)} b_q = 1.$$

Assume now that we proved the existence of a vector space $L^N \subset \mathcal{L} \cup \{0\}$ of dimension $N \geq 1$. Let $\{(f_1, g_1), \ldots, (f_N, g_N)\}$ be a basis of L^N. We need to find a pair (f, g) such that for any $\alpha = (\alpha_1, \ldots, \alpha_N) \in \mathbb{R}^N$ and $\beta \in \mathbb{R}$, the pair

$$\left(\beta f + \sum_{l=1}^N \alpha_l f_l, \beta g + \sum_{l=1}^N \alpha_l g_l\right)$$

satisfies (4.26) and (4.27). By bilinearity of the $\odot$ product, this amounts to say that

$$\left\{\begin{array}{rcl} \beta^2 f \odot (sg) + \beta \sum_{l=1}^N \alpha_l f \odot (sg_l) + \beta \sum_{l=1}^N \alpha_l f_l \odot (sg) & = & 0 \\ \beta^2 f \odot (s^2 g) + \beta \sum_{l=1}^N \alpha_l f \odot (s^2 g_l) + \beta \sum_{l=1}^N \alpha_l f_l \odot (s^2 g) & = & 0 \\ \beta^2 g \odot (sf) + \beta \sum_{l=1}^N \alpha_l g \odot (sf_l) + \beta \sum_{l=1}^N \alpha_l g_l \odot (sf) & = & 0 \\ \beta^2 g \odot (s^2 f) + \beta \sum_{l=1}^N \alpha_l g \odot (s^2 f_l) + \beta \sum_{l=1}^N \alpha_l g_l \odot (s^2 f) & = & 0, \end{array}\right. \tag{4.29}$$

$$\left\{\begin{array}{rcl} \int_0^1 f(s)\, ds & = & 0 \\ \int_0^1 sf(s)\, ds & = & 0, \end{array}\right. \qquad \left\{\begin{array}{rcl} \int_0^1 g(s)\, ds & = & 0 \\ \int_0^1 sg(s)\, ds & = & 0, \end{array}\right. \tag{4.30}$$

and

$$\beta^2 (tf) \odot (sg) + \beta \sum_{l=1}^N \alpha_l (tf) \odot (sg_l) + \beta \sum_{l=1}^N \alpha_l (tf_l) \odot (sg) + \sum_{l=1}^N \alpha_l^2 (tf_l) \odot (sg_l) \neq 0. \tag{4.31}$$

In fact, any pair (f,g) satisfying (4.26)-(4.27) and the systems

$$\left\{\begin{array}{rcl} f\odot(sg_l) & = & 0\\ f\odot(s^2g_l) & = & 0\\ g_l\odot(sf) & = & 0\\ g_l\odot(s^2f) & = & 0\\ (tf)\odot(sg_l) & = & 0 \end{array}\right. \qquad \left\{\begin{array}{rcl} f_l\odot(sg) & = & 0\\ f_l\odot(s^2g) & = & 0\\ g\odot(sf_l) & = & 0\\ g\odot(s^2f_l) & = & 0\\ (tf_l)\odot(sg) & = & 0 \end{array}\right. \tag{4.32}$$

provides a solution. First we claim that there is a polynomial f_0 satisfying the left systems in (4.30) and (4.32). As a matter of fact, f_0 has to belong to the intersection of $2+5N$ hyperplanes in $\mathbb{R}_d[X]$. Such an intersection is not trivial if d is large enough. The function $f=f_0$ being fixed, we need now to find a polynomial g solution to the four last equations of system (4.26), to (4.27), and to the right systems in (4.30) and (4.32). Thus g needs to belong to the intersection of $6+5N$ hyperplanes and to satisfies (4.27). Let

$$f_l(t)=\sum_{p=0}^{P}a_p^l t^p \quad \text{and} \quad g_l(t)=\sum_{q=0}^{P}b_q^l t^q,$$

$$f_0(t)=\sum_{p=0}^{d}a_p^0 t^p \quad \text{and} \quad g(t)=\sum_{q\in\mathbb{Z}}b_q t^q,$$

where P is the maximum of the degrees of $f_1,\dots,f_N,g_1,\dots,g_N$ and d is the degree of f_0. We have

$$\left\{\begin{array}{rcl} \int_0^1 g(s)ds & = & \sum_q \frac{1}{q+1}\,b_q\\ \int_0^1 sg(s)ds & = & \sum_q \frac{1}{q+2}\,b_q, \end{array}\right. \tag{4.33}$$

$$\left\{\begin{array}{rcl} f_l\odot(sg) & = & \sum_q\left(\sum_p \alpha_{p,q+1}\,a_p^l\right)\,b_q\\ f_l\odot(s^2g) & = & \sum_q\left(\sum_p \alpha_{p,q+2}\,a_p^l\right)\,b_q\\ g\odot(sf_l) & = & \sum_q\left(\sum_p \alpha_{q,p+1}\,a_p^l\right)\,b_q\\ g\odot(s^2f_l) & = & \sum_q\left(\sum_p \alpha_{q,p+2}\,a_p^l\right)\,b_q, \end{array}\right. \tag{4.34}$$

and

$$(tf_l)\odot(sg)=\sum_q\left(\sum_p \alpha_{p+1,q+1}\,a_p^l\right)\,b_q \tag{4.35}$$

for every $l=1,...,N$, and moreover

$$(tf_0)\odot(sg)=\sum_q\left(\sum_p \alpha_{p+1,q+1}\,a_p^0\right)\,b_q. \tag{4.36}$$

We need to show that the kernel of the linear form (given by (4.36))

$$\Phi_{f_0} \,:\, (b_q) \in \mathbb{R}_d[X] \longmapsto \sum_q \left(\sum_p \alpha_{p+1,q+1}\, a_p^0 \right) b_q$$

does not contain the intersection of the kernels of the $2 + 4(N+1) + N = 5N + 6$ linear forms given by (4.33)-(4.35). If this is the case, for every integer $d \geq 0$, any choice of f_0 in $\mathbb{R}_d[X]$, and any integer $d' \geq 0$, there are $C = 5N + 6$ real numbers (not all zero)

$$\lambda_1^{l,d'}, \ldots, \lambda_5^{l,d'}, \lambda_6^{0,d'}, \lambda_7^{0,d'}, \lambda_8^{0,d'}, \lambda_9^{0,d'}, \lambda_{10}^{d'}, \lambda_{11}^{d'},$$

such that for every integer $q \in \{0, \ldots, d'\}$,

$$\begin{aligned}
\sum_{p=0}^{d} \alpha_{p+1,q+1}\, a_p^0 \;=\; & \sum_{l=1}^{N} \lambda_1^{l,d'} \left(\sum_{p=0}^{P} \alpha_{p,q+1}\, a_p^l \right) + \sum_{l=1}^{N} \lambda_2^{l,d'} \left(\sum_{p=0}^{P} \alpha_{p,q+2}\, a_p^l \right) \\
& + \sum_{l=1}^{N} \lambda_3^{l,d'} \left(\sum_{p=0}^{P} \alpha_{q,p+1}\, a_p^l \right) + \sum_{l=1}^{N} \lambda_4^{l,d'} \left(\sum_{p=0}^{P} \alpha_{q,p+2}\, a_p^l \right) \\
& + \sum_{l=1}^{N} \lambda_5^{l,d'} \left(\sum_{p=0}^{d} \alpha_{p+1,q+1}\, a_p^l \right) + \lambda_6^{0,d'} \left(\sum_{p=0}^{d} \alpha_{p,q+1}\, a_p^0 \right) \\
& + \lambda_7^{0,d'} \left(\sum_{p=0}^{d} \alpha_{p,q+2}\, a_p^0 \right) + \lambda_8^{0,d'} \left(\sum_{p=0}^{d} \alpha_{q,p+1}\, a_p^0 \right) \\
& + \lambda_9^{0,d'} \left(\sum_{p=0}^{d} \alpha_{q,p+2}\, a_p^0 \right) + \frac{\lambda_{10}^{d'}}{q+1} + \frac{\lambda_{11}^{d'}}{q+2}.
\end{aligned}$$

Observe that the above equality can be written as

$$\begin{aligned}
0 \;=\; & \sum_{p=0}^{d}\left[\left(\sum_{l=1}^{N}\lambda_5^{l,d'}\,a_p^l\right)-a_p^0\right]\alpha_{p+1,q+1}\\
& +\sum_{p=0}^{d}\left[\left(\sum_{l=1}^{N}\lambda_1^{l,d'}\,a_p^l\right)+\lambda_6^{0,d'}\,a_p^0\right]\alpha_{p,q+1}\\
& +\sum_{p=0}^{d}\left[\left(\sum_{l=1}^{N}\lambda_2^{l,d'}\,a_p^l\right)+\lambda_7^{0,d'}\,a_p^0\right]\alpha_{p,q+2}\\
& +\sum_{p=0}^{d}\left[\left(\sum_{l=1}^{N}\lambda_3^{l,d'}\,a_p^l\right)+\lambda_8^{0,d'}\,a_p^0\right]\alpha_{q,p+1}\\
& +\sum_{p=0}^{d}\left[\left(\sum_{l=1}^{N}\lambda_4^{l,d'}\,a_p^l\right)+\lambda_9^{0,d'}\,a_p^0\right]\alpha_{q,p+2}\\
& +\frac{\lambda_{10}^{d'}}{q+1}+\frac{\lambda_{11}^{d'}}{q+2}.
\end{aligned}$$

For every q, let

$$V(q)=\big(V^1(q),\dots,V^7(q)\big)\in\mathbb{R}^{7(d+1)}$$

with

$$V^i(q)=\big(V_0^i(q),\dots,V_d^i(q)\big)\in\mathbb{R}^{d+1}\qquad\forall i=1,\dots,7,$$

defined by

$$\begin{cases}
V_p^1(q) &= \alpha_{p+1,q+1}\\
V_p^2(q) &= \alpha_{p,q+1}\\
V_p^3(q) &= \alpha_{p,q+2}\\
V_p^4(q) &= \alpha_{q,p+1}\\
V_p^5(q) &= \alpha_{q,p+2}\\
V_p^6(q) &= \frac{1}{(d+1)(q+1)}\\
V_p^7(q) &= \frac{1}{(d+1)(q+2)}
\end{cases}$$

for every $p=0,\dots,d$. The above equality means that for every $d'\geq 0$, there is a

linear form $\Psi^{d'}$ on $\mathbb{R}^{7(d+1)}$ of the form

$$\begin{aligned}\Psi^{d'}(V) &= \sum_{p=0}^{d}\Big[\Gamma_p^{1,d'} - a_p^0\Big]\, V_p^1 + \sum_{p=0}^{d}\Big[\Gamma_p^{2,d'} + \lambda_6^{0,d'}\, a_p^0\Big]\, V_p^2 \\ &\quad + \sum_{p=0}^{d}\Big[\Gamma_p^{3,d'} + \lambda_7^{0,d'}\, a_p^0\Big]\, V_p^3 + \sum_{p=0}^{d}\Big[\Gamma_p^{4,d'} + \lambda_8^{0,d'}\, a_p^0\Big]\, V_p^4 \\ &\quad + \sum_{p=0}^{d}\Big[\Gamma_p^{5,d'} + \lambda_9^{0,d'}\, a_p^0\Big]\, V_p^5 + \sum_{p=0}^{d}\lambda_{10}^{d'}\, V_p^6 + \sum_{p=0}^{d}\lambda_{11}^{d'}\, V_p^7\end{aligned}$$

for every $V = \big(V^1, \dots, V^7\big) \in (\mathbb{R}^{(d+1)})^7$ such that

$$\Psi^{d'}\big(V(q)\big) = 0 \qquad \forall q \in \{0, \dots, d'\}.$$

For every integer $d' \geq 0$, let $\dim(d')$ be the dimension of the vector space which is generated by $V(0), \dots, V(d')$. The function $d' \mapsto \dim(d')$ is nondecreasing and valued in the positive integers. Moreover it is bounded by $7(d+1)$. Thus it is stationnary and in consequence there is $\bar{d}' \geq 0$ such that for every $q > \bar{d}'$,

$$V(q) \in \mathrm{Span}\Big\{V(0), \dots, V\big(\bar{d}'\big)\Big\}.$$

Therefore there is a linear form $\Psi : \mathbb{R}^{7(d+1)} \to \mathbb{R}$ of the form

$$\begin{aligned}\Psi(V) &= \sum_{p=0}^{d}\big[\Gamma_p^1 - a_p^0\big]\, V_p^1 + \sum_{p=0}^{d}\big[\Gamma_p^2 + \lambda_6^0\, a_p^0\big]\, V_p^2 \\ &\quad + \sum_{p=0}^{d}\big[\Gamma_p^3 + \lambda_7^0\, a_p^0\big]\, V_p^3 + \sum_{p=0}^{d}\big[\Gamma_p^4 + \lambda_8^0\, a_p^0\big]\, V_p^4 \\ &\quad + \sum_{p=0}^{d}\big[\Gamma_p^5 + \lambda_9^0\, a_p^0\big]\, V_p^5 + \sum_{p=0}^{d}\lambda_{10}\, V_p^6 + \sum_{p=0}^{d}\lambda_{11}\, V_p^7,\end{aligned}$$

for every $V = \big(V^1, \dots, V^7\big) \in (\mathbb{R}^{(d+1)})^7$ such that

$$\Psi\big(V(q)\big) = 0 \qquad \forall q \in \mathbb{N}.$$

We observe that for any integers $p, q \geq 0$,

$$\alpha_{p,q} = \frac{1}{(q+1)(p+q+2)} = \frac{1}{p+1}\left[\frac{1}{q+1} - \frac{1}{q+p+2}\right],$$

then we have for all $q \in \mathbb{N}$,

$$\begin{aligned}
0 &= \Psi\big(V(q)\big) \\
&= \sum_{p=0}^{d} \left[\frac{\Gamma_p^1 - a_p^0}{p+2}\right] \left(\frac{1}{q+2}\right) - \sum_{p=0}^{d} \left[\frac{\Gamma_p^1 - a_p^0}{p+2}\right] \left(\frac{1}{q+p+4}\right) \\
&\quad + \sum_{p=0}^{d} \left[\frac{\Gamma_p^2 + \lambda_6^0\, a_p^0}{p+1}\right] \left(\frac{1}{q+2}\right) - \sum_{p=0}^{d} \left[\frac{\Gamma_p^2 + \lambda_6^0\, a_p^0}{p+1}\right] \left(\frac{1}{q+p+3}\right) \\
&\quad + \sum_{p=0}^{d} \left[\frac{\Gamma_p^3 + \lambda_7^0\, a_p^0}{p+1}\right] \left(\frac{1}{q+3}\right) - \sum_{p=0}^{d} \left[\frac{\Gamma_p^3 + \lambda_7^0\, a_p^0}{p+1}\right] \left(\frac{1}{q+p+4}\right) \\
&\quad + \sum_{p=0}^{d} \left[\frac{\Gamma_p^7 + \lambda_8^0\, a_p^0}{p+2}\right] \left(\frac{1}{q+p+3}\right) + \sum_{p=0}^{d} \left[\frac{\Gamma_p^5 + \lambda_9^0\, a_p^0}{p+3}\right] \left(\frac{1}{q+p+4}\right) \\
&\quad + \sum_{p=0}^{d} \frac{\lambda_{10}}{d+1} \left(\frac{1}{q+1}\right) + \sum_{p=0}^{d} \frac{\lambda_{11}}{d+1} \left(\frac{1}{q+2}\right).
\end{aligned}$$

This can be written as

$$\begin{aligned}
0 &= \Psi\big(V(q)\big) \\
&= \sum_{p=0}^{d} \frac{\lambda_{10}}{d+1} \left(\frac{1}{q+1}\right) + \sum_{p=0}^{d} \left[\frac{\Gamma_p^1 - a_p^0}{p+2} + \frac{\Gamma_p^2 + \lambda_6^0\, a_p^0}{p+1} + \frac{\lambda_{11}}{d+1}\right] \left(\frac{1}{q+2}\right) \\
&\quad + \sum_{p=0}^{d} \left(\left[\frac{\Gamma_p^3 + \lambda_7^0\, a_p^0}{p+1}\right] + \left[\frac{\Gamma_0^7 + \lambda_8^0\, a_0^0}{2}\right] - \left[\Gamma_0^2 + \lambda_6^0\, a_0^0\right] \right) \left(\frac{1}{q+3}\right) \\
&\quad - \sum_{r=4}^{d+3} \Delta_r \cdot \left(\frac{1}{q+r}\right) \\
&\quad - \left(\left[\frac{\Gamma_d^3 + \lambda_7^0\, a_d^0}{d+1}\right] - \left[\frac{\Gamma_d^5 + \lambda_9^0\, a_d^0}{d+3}\right] + \left[\frac{\Gamma_d^1 - a_d^0}{d+2}\right] \right) \left(\frac{1}{q+d+4}\right),
\end{aligned}$$

where for any $r \in \{4, \ldots, d+3\}$,

$$\begin{aligned}
\Delta_r &:= \frac{\Gamma_{r-3}^7 + \lambda_8^0\, a_{r-3}^0 + \Gamma_{r-4}^5 + \lambda_9^0 a_{r-4}^0}{r-1} \\
&\qquad - \frac{\Gamma_{r-3}^2 + \Gamma_{r-4}^1 + \lambda_6^0\, a_{r-3}^0 - a_{r-4}^0}{r-2} - \frac{\Gamma_{r-4}^3 + \lambda_7^0\, a_{r-4}^0}{r-3} \\
&= \frac{\Gamma_{r-3}^7 + \Gamma_{r-4}^5}{r-1} - \frac{\Gamma_{r-4}^1 + \Gamma_{r-3}^2}{r-2} - \frac{\Gamma_{r-4}^3}{r-3} + \left(\frac{\lambda_8^0}{r-1} - \frac{\lambda_6^0}{r-2}\right) a_{r-3}^0 \\
&\qquad + \left(\frac{\lambda_9^0}{r-1} - \frac{\lambda_7^0}{r-3} - \frac{1}{r-2}\right) a_{r-4}^0.
\end{aligned}$$

The function Ψ is a rational function with infinitely many zeros, so it vanishes everywhere and in consequence all its coefficients vanish. Remember in addition that by construction,

$$\Gamma_p^l = 0 \qquad \forall p \in \{P+1, \dots, d\}, \forall l \in \{1, \dots, N\}.$$

Then we have $\Delta_r = 0$ for any $r \in \{P+5, \dots, d+3\}$, that is

$$\left(\frac{\lambda_8^0}{r-1} - \frac{\lambda_6^0}{r-2}\right) a_{r-3}^0 + \left(\frac{\lambda_9^0}{r-1} - \frac{\lambda_7^0}{r-3} - \frac{1}{r-2}\right) a_{r-4}^0 = 0,$$

and in addition the coefficient in front of $\frac{1}{q+d+4}$ vanishes, that is

$$\left(\frac{\lambda_7^0}{d+1} - \frac{\lambda_9^0}{d+3}\right) a_d^0 = \frac{a_d^0}{d+2}.$$

In conclusion, if there is no vector space of dimension $N+1$ in $\mathcal{L} \cup \{0\}$, then for every polynomial $f_0 \in \mathbb{R}_d[X]$ of degree d (that is $a_d^0 \neq 0$) the linear form Φ_{f_0} contains the intersection of the kernels of the $5N+6$ linear forms given by (4.33)-(4.35). By the above discussion, this implies that there are four reals numbers A, B, C, D not all zero (because $a_d^0 \neq 0$) such that

$$\left(\frac{A}{r-1} + \frac{B}{r-2}\right) a_{r-3}^0 + \left(\frac{C}{r-1} - \frac{1}{r-2} + \frac{D}{r-3}\right) a_{r-4}^0 = 0,$$

for any $r \in \{P+5, \dots, d+3\}$ and in addition

$$\left(\frac{D}{d+1} + \frac{C}{d+3}\right) a_d^0 = -\frac{a_d^0}{d+2} \implies D = -(d+1)\left(\frac{1}{d+2} + \frac{C}{d+3}\right).$$

Note that for every $p \in \{P+2, \dots, d\}$,

$$\begin{aligned} & \frac{C}{p+2} - \frac{1}{p+1} + \frac{D}{p} \\ = \; & \frac{C}{p+2} - \frac{1}{p+1} - \frac{d+1}{p}\left(\frac{1}{d+2} + \frac{C}{d+3}\right) \\ = \; & \frac{2C(d+2)(p-d-1)(p+1) - (d+3)((2d+3)p+d+1)(p+2)}{p(p+1)(p+2)(d+2)(d+3)} \end{aligned}$$

This means that the set of coefficients $(a_p^0)_{p \in \{P+1,d\}}$ belongs to the algebraic set $\mathcal{S}$ of $(d-P)$-tuples $(a_p)_{p \in \{P+1,d\}} \in \mathbb{R}^{d-N}$ for which there is $(A, B, C) \in \mathbb{R}^3$ such that

$$\begin{aligned} & \left(\frac{2C(d+2)(p-d-1)(p+1) - (d+3)((2d+3)p+d+1)(p+2)}{p(p+1)(p+2)(d+2)(d+3)}\right) a_{p-1} \\ & \qquad + \left(\frac{A}{p+2} + \frac{B}{p+1}\right) a_p = 0 \qquad \forall p \in \{P+2, \dots, d\}. \quad (4.37) \end{aligned}$$

For every triple $(A,B,C)\in\mathbb{R}^3$, denote by $\mathcal{S}(A,B,C)$ the algebraic set of $(d-P)$-tuples $(a_p)_{p\in\{P+1,d\}}\in\mathbb{R}^{d-N}$ satisfying (4.37). Notice that for every $(A,B,C)\in\mathbb{R}^3$, the function

$$p\in\{P+2,\dots,d\}\longmapsto\frac{A}{p+2}+\frac{B}{p+1}=\frac{(A+B)p+(A+2B)}{(p+1)(p+2)}$$

vanishes for at most one p in $\{P+2,\dots,d\}$. This means that given $(A,B,C)\in\mathbb{R}^3$ either we have

$$a_p=C_p^d\,a_{p-1}\qquad\forall p\in\{P+2,\dots,d\},$$

with

$$C_p^d:=\left(\frac{2C(d+2)(p-d-1)(p+1)-(d+3)((2d+3)p+d+1)(p+2)}{p(p+1)(p+2)(d+2)(d+3)}\right)\Big/\left(\frac{(A+B)p+(A+2B)}{(p+1)(p+2)}\right)\qquad\forall p\in\{P+2,\dots,d\},$$

or there is $\bar p=\bar p(A,B,C)\in\{P+2,\dots,d\}$ such that

$$a_p=C_p^d\,a_{p-1}\qquad\forall p\in\{P+2,\dots,d\}\setminus\{\bar p\}$$

and

$$\left(\frac{2C(d+2)(\bar p-d-1)(\bar p+1)-(d+3)((2d+3)\bar p+d+1)(\bar p+2)}{\bar p(\bar p+1)(\bar p+2)(d+2)(d+3)}\right)a_{\bar p-1}=0.$$

Since the sets we are dealing with are algebraic (see [5, 17]), we infer that given $(A,B,C)\in\mathbb{R}^3$, the algebraic set $\mathcal{S}(A,B,C)\subset\mathbb{R}^{d-N}$ has at most dimension three, which means that $\mathcal{S}\subset\mathbb{R}^{d-N}$ has at most dimension six.

In conclusion, the coefficients $(a_p^0)_{p\in\{0,d\}}$ of f_0 have to belong to the intersection of $2+5N$ hyperplanes in $\mathbb{R}_d[X]$, and if in addition if there is no vector space of dimension $N+1$ in $\mathcal{L}\cup\{0\}$, then the $(d-P)$-tuples $(a_p^0)_{p\in\{P+1,d\}}$ must belong to $\mathcal{S}\subset\mathbb{R}^{d-N}$ of dimension ≤ 6. But, for d large enough, the intersection of $2+5N$ hyperplanes in $\mathbb{R}_d[X]$ with the complement of an algebraic set of dimension at most $6+P+1$ is non empty. This concludes the proof of Lemma 4.2.10.

Bibliography

[1] A. A. Agrachev and Yu. L. Sachkov. *Control Theory from the Geometric Viewpoint*. Encyclopaedia of Mathematical Sciences, vol. 87, Springer-Verlag, Berlin 2004.

[2] A. A. Agrachev and P. Lee. *Optimal transportation under nonholonomic constrains*. Trans. Amer.Math.Soc., 361(11), 6019-6047, 2009.

[3] D.V. Anosov. Generic properties of closed geodesics. *Izv. Akad. Nauk. SSSR Ser. Mat.*, 46(4) :675–709, 896, 1982.

[4] B. Bonnard and M. Chyba. *Singular trajectories and their role in control theory.* Mathèmatiques Applications (Berlin) [Mathematics Applications], vol. 40, Springer verlag, Berlin 2003.

[5] J. Bocknak, M. Coste, M.-F. Roy. *Real algebraic geometry.* Ergebnisse des Mathematik und ihrer Grenzgebiete (3), vol. 36, Springer-Verlag, Berlin 1998.

[6] A. Bellaiche. The tangent space in sub-Riemannian geometry. *In Sub-Riemannian geometry*, volume 144 of *Progr. Math.*, pages 178. Birkh auser, Basel, 1996.

[7] G.E. Bredon. Topology and Geometry. *Graduate Texts in Mathematics*, volume 139 of *Springer-Verlag*, New York, 1993.

[8] Roger W. Brockett. Volterra series and geometric control theory. *Automatica-J. IFAC*, 12, no. 2, 167-176, 1976.

[9] C.M. Carballo and J.A.G. Miranda. Jets of closed orbits of Mañé's generic Hamiltonian flows. *Bull. Braz. Math. Soc.* 44(2) :219–232, 2013.

[10] W.L.Chow. Uber Systeme von linearen partiellen Differentialgleichungen erster Ordnung. *Math. Ann. 117*, 98-105, 1939.

[11] G. Contreras. Partially hyperbolic geodesic flows are Anosov. *C.R. Math. Acad. Sci. Paris*, 334(2) :585-590, 2002.

[12] G. Contreras. Geodesic flows with positive topological entropy, twist maps and hyperbolicity. *Ann. of Math. (2)*, 172(2) :761-808, 2010.

[13] G. Contreras and R. Iturriaga. Convex Hamiltonians without conjugate points. *Ergodic Theory Dynam. Systems*, 19(4) :901–952, 1999.

[14] G. Contreras and R. Iturriaga. Convex Hamiltonians without conjugate points. *Ergodic Theory Dynam. Systems*, 19(4) :901–952, 1999.

[15] G. Contreras and G. Paternain. Genericity of geodesic flows with positive topological entropy on S^2. *J.Diff.Geom.* 61, 1-49, 2002.

[16] J.-M. Coron. *Control and nonlinearity.* Mathematical Surveys and Monographs, 136. American Mathematical Society, Providence, RI, 2007.

[17] M. Coste. *Ensembles semi-algébriques.* In Real algebraic geometry and quadratic forms (Rennes, 1981), vol. 959, Lecture Notes in Math., pp. 109–138. Springer, Berlin, 1982.

[18] M.P. Do Carmo. *Riemannian geometry.* Birkhäuser, Boston, MA, 1992.

[19] B.A. Dubrovin, A.T. Fomenko, and S.P. Novikov. *Modern geometry–methods and applications, Part I.* Graduate Texts in Mathematics, vol. 93, Springer-Verlag, New York, 1992.

[20] M. Elkadi and B. Mourrain. Symbolic-numeric methods for solving polynomial equations and application. *Solving polynomial equations*, 125-168, *Algorithms Comput. Math.*, 14 :125-168, Springer, Berlin, 2005.

[21] A. Figalli and L. Rifford. Closing Aubry sets I. *Comm. Pure Appl. Math.*, to appear.

[22] A. Figalli and L. Rifford. Closing Aubry sets II. *Comm. Pure Appl. Math.*, to appear.

[23] J. Franks. Necessary conditions for stability of diffeomorphisms. *Trans. Amer. Math. Soc.*, 158 :301-308, 1971.

[24] M. Golubitsky and V. Guillemin. Stable mappings and their singularities. *Graduate Texts in Mathematics, Springer-Verlag*, 14, 1973.

[25] H. Hermes. On local and global controllability. *SIAM .J. Control* , 12 :252-261, 1974.

[26] H. Hermes. Local controllability and sufficient conditions in singular problems. *J. Differential Equations* , 20 :213-232, 1976.

[27] H. Hermes. local controllability and sufficient conditions in singular problems II. *SIAM .J. Control Optim.*, 14(6) :1049-1062, 1976.

[28] H. Hermes. High order algebraic conditions for controllability. *Lecture Notes in Economics and Mathematical Systems* , 131 :165-171, 1976.

[29] H. Hermes. On local controllability. *SIAM .J. Control Optim.*, 20(2) :211-220, 1982.

[30] H. Hermes. Control systems which generate decomposable Lie algebras. *J. Differential Equations*, 44 :166-187, 1982.

[31] H. Hermes. Nilpotent approximations of control systems and distributions. *SIAM .J. Control Optim.*, 24(4) :731-736, 1986.

[32] H. Hermes. Nilpotent and high-order approximations of vector field systems. *SIAM Review*, 33(2) :238-264, 1991.

[33] H. Hermes and J.P. Lasalle. *Functional Analysis and Time Optimal Control*. Academic Press, New York, 1969.

[34] M.W. Hirsch, C.C. Pugh, and M. Shub. *Invariant manifolds*. Lecture Notes in Mathematics, vol. 583, Springer-Verlag, Berlin-New York, 1977.

[35] F. Jean. *Systèmes Dynamiques. Stabilité et Commande*. Cours de l'ENSTA, 2010.

[36] F. Jean. *Géométrie Différentielle et Application au Contrôle Géométrique*. Cours de l'ENSTA, 2010.

[37] F. Jean. *Control of Nonholonomic Systems and Sub-Riemannian Geometry*. ArXiv e-prints, 1209.4387, Sept. 2012. Lectures given at the CIMPA School Géométrie sous-riemannienne, Beirut, Lebanon.

[38] V. Jurjevic. *Geometric Control Theory*. Cambridge Studies in Advanced Mathematics, vol. 52, Cambridge University Press, Cambridge, 1997.

[39] R. Kalman, Y-C Ho and K.S. Narendra. Controllability of linear dynamical systems. *Contributions to Differential Equations* 1 :189-213, 1963.

[40] W.Klingenberg and F.Takens. *Generic properties of geodesic flows*. Math. Ann.197 :323-334, 1972.

[41] R. Kulkarni. Curvature structures and conformal transformations. J. Diff. Geom. 4, 425-451 (1970).

[42] A. Lazrag. A geometric control proof of linear Franks' lemma for geodesic flows. Submitted.

[43] A. Lazrag, L. Rifford and R. Ruggiero. Franks' lemma for C^2-Mañé perturbations of Riemannian metrics and application to persistence. Submitted.

[44] A. Lazrag. Control theory and dynamical systems. Thesis, 2014.

[45] F. S. Leite. *introduction to geometric control theory -controllability and Lie bracket-*. Lecture given at the Seminar of the Mathematics PhD Program UCoimbra-UPorto, 2010.

[46] R. Mañé. An ergodic closing lemma. *Annals of Mathematics* 116 :503–540, 1982.

[47] R. Mañé. A proof of the C^1 stability conjecture. *Inst. Hautes Études Sci. Publ. Math.*, 66 :161–210, 1988.

[48] R. Mañé. Contributions to the stability conjecture. *Topology*, 17 :383–396, 1978.

[49] R. Mañé On the minimizing measures of Lagrangian dynamical systems. *Nonlinearity* 5 (1992) n. 3, 623-638.

[50] R. Mañé. Global variational methods in conservative dynamics. IMPA, Rio de Janeiro (1993).

[51] J. Moser. Proof of a generalized form of a fixed point theorem due to G. D. Birkhoff. Lecture Notes in Mathematics Vol. 597, pp. 464-549, Berlin, Heildelberg, New York Springer, 1977.

[52] S. Newhouse. Quasi-elliptic periodic points in conservative dynamical systems. *Amer. J. Math.* 99(5) :1061–1087, 1977.

[53] E. Oliveira. Generic properties of Lagrangians on surfaces : the Kupka-Smale theorem. *Discrete Contin. Dyn. Syst.*, 21(2) :551–569, 2008.

[54] J. Palis. A note on Ω-stability. *Global Analysis, Proc. Symp. Pure Math. XIV* (1970) AMS.

[55] M. Paternain. Expansive geodesic flows on surfaces. *Ergodic Theory Dynam. Systems*, 13(1) :153–165, 1993.

[56] C.C. Pugh. The closing lemma. *Amer. J. Math.*, 89 :956–1009, 1967. MR0226669, Zbl 0167.21803

[57] C.C. Pugh. An improved closing lemma and a general density theorem. *Amer. J. Math.*, 89 :1010–1021, 1967. MR0226670, Zbl 0167.21804

[58] C. Pugh and C. Robinson. The C^1 closing lemma, including Hamiltonians. *Ergodic Theory Dynam. Systems*, 3 :261–313, 1983.

[59] P. Rashevsky. About connecting two points of complete nonholonomic space by admisible curve. *Uch Zapiski Ped. Ins. Libknexta 2*, 83-94, 1938.

[60] L. Rifford. Geometric control theory, closing lemma, and weak KAM theory (4 lectures). *in Weak KAM Theory in Italy*, Cortona (Italy), 2011.

[61] L. Rifford. *Sub-Riemannian Geometry and Optimal Transport*. Preprint, 2012

[62] L. Rifford and R. Ruggiero. Generic properties of closed orbits of Hamiltonian flows from Mañé's viewpoint. *Int. Math. Res. Not. IMRN*, 22 :5246–5265, 2012.

[63] C. Robinson. Generic properties of conservative systems I and II. *Amer. J. Math.*, 92 :562–603 and 897–906, 1970.

[64] R. Ruggiero. Persistently expansive geodesic flows. *Comm. Math. Phys.* 140(1) :203-215, 1991.

[65] R. Ruggiero. On the creation of conjugate points. *Math. Z.* 208, 41-55 (1991).

[66] T. Sakai. *Riemannian geometry.* Translations of Mathematical Monographs, Vol. 149. American Mathematical Society, Providence, RI, 1996. Translated from the 1992 Japanese original by the author.

[67] S. Smale. The Ω-stability theorem. *Global Analysis, Proc. Symp. Pure Math. XIV* (1970) AMS.

[68] E.D. Sontag. *Mathematical control theory.* Texts in Applied Mathematics, vol. 6, Springer-Verlag, New York, 1998, Deterministic finite-dimensional systems.

[69] B. Sturmfels. *Solving Systems of Polynomial Equations.* Amer.Math.Soc., CBMS Regional Conferences Series, No 97, Providence, Rhode Island, 2002.

[70] H.J. Sussmann. A general theorem on local controllability. *SIAM .J. Control Optim.* 25(1) :158-194, 1987.

[71] H.J. Sussmann. High-order open mapping theorems. *Directions in mathematical systems theory and optimazation, Lecture Notes in Control and Inform. Sci.* 286 :293-316, Berlin, 2003.

[72] H.J. Sussmann and V. Jurdjevic. Controllability of nonlinear systems. *J. Differential Equations* 12 :95-116, 1972.

[73] H.J. Sussmann and V. Jurdjevic. Control Systems on Lie-Groups. *J. Differential Equations* 12 :313-329, 1972.

[74] E. Trélat. *Contrôle optimal, Théorie et applications.* Mathématiques concrètes, Vuibert, Paris 2005.

[75] A. I. Tretiyak. Sufficient conditions for local controllability and high-order necessary conditions for optimality. A differential-geometric approach. *Journal of Mathematical Sciences* 85(3) :1899-2001, 1997.

[76] C. Varsan. On local controllability for nonlinear control systems. *Rev. Roumaine Math. Pures Appl* 10, 1984.

[77] C. Villani. Optimal transport, old and new. Grundlehren des mathematischen Wissenschaften [Fundamental Principles of Mathematical Sciences], Vol. 338, Springer-Verlag, Berlin-New York, 2009.

[78] D. Visscher. A new proof of Franks' lemma for geodesic flows. *Discrete Contin. Dyn. Syst.*, to appear.

[79] T. Vivier. Robustly transitive 3-dimensional regular energy surfaces are Anosov. PhD thesis Preprint, Dijon, 2005.