HAL
open science

Geometry of convex measures and links with the Information theory

Arnaud Marsiglietti

To cite this version:

Arnaud Marsiglietti. Geometry of convex measures and links with the Information theory. General Mathematics [math.GM]. Université Paris-Est, 2014. English. NNT : 2014PEST1032 . tel-01228973v2

HAL Id: tel-01228973

https://theses.hal.science/tel-01228973v2

Submitted on 6 Mar 2015

HAL is a multi-disciplinary open access archive for the deposit and dissemination of scientific research documents, whether they are published or not. The documents may come from teaching and research institutions in France or abroad, or from public or private research centers.

L'archive ouverte pluridisciplinaire **HAL**, est destinée au dépôt et à la diffusion de documents scientifiques de niveau recherche, publiés ou non, émanant des établissements d'enseignement et de recherche français ou étrangers, des laboratoires publics ou privés.

UNIVERSITÉ PARIS-EST

THÈSE

Pour l'obtention du grade de

DOCTEUR ÈS SCIENCES

ÉCOLE DOCTORALE MATHÉMATIQUES ET SCIENCES ET TECHNOLOGIE DE L'INFORMATION ET DE LA COMMUNICATION

DISCIPLINE : MATHÉMATIQUES

Présentée par

Arnaud MARSIGLIETTI

Intitulée

Géométrie des mesures convexes et liens avec la théorie de l'information

---

Dirigée par **Matthieu FRADELIZI**

Soutenue le **mardi 24 juin 2014**
Devant le **jury** composé de

Jean-François BERCHER	Univ. Paris-Est Marne-la-Vallée	Examinateur
Sergey BOBKOV	University of Minnesota	Rapporteur
François BOLLEY	Univ. Paris-Dauphine	Examinateur
Dario CORDERO-ERAUSQUIN	Univ. Pierre et Marie Curie	Examinateur
Matthieu FRADELIZI	Univ. Paris-Est Marne-la-Vallée	Directeur de thèse
Ivan GENTIL	Univ. Claude Bernard Lyon 1	Rapporteur
Olivier GUÉDON	Univ. Paris-Est Marne-la-Vallée	Examinateur
Mathieu MEYER	Univ. Paris-Est Marne-la-Vallée	Président du jury

Thèse préparée au

Laboratoire d'Analyse et de Mathématiques Appliquées
LAMA UMR 8050 CNRS
Université Paris-Est Marne-la-Vallée
5, boulevard Descartes, Champs-sur-Marne
77454 Marne-la-Vallée cedex 2
FRANCE

Résumé

Cette thèse est consacrée à l'étude des mesures convexes ainsi qu'aux analogies entre la théorie de Brunn-Minkowski et la théorie de l'information.

Je poursuis les travaux de Costa et Cover qui ont mis en lumière des similitudes entre deux grandes théories mathématiques, la théorie de Brunn-Minkowski d'une part et la théorie de l'information d'autre part. Partant de ces similitudes, ils ont conjecturé, comme analogue de la concavité de l'entropie exponentielle, que la racine n-ième du volume parallèle de tout ensemble compact de $\mathbb{R}^n$ est une fonction concave, et je résous cette conjecture de manière détaillée. Par ailleurs, j'étudie les mesures convexes définies par Borell et je démontre pour ces mesures une inégalité renforcée de type Brunn-Minkowski pour les ensembles convexes symétriques.

Cette thèse se décompose en quatre parties. Tout d'abord, je rappelle un certain nombre de notions de base. Dans une seconde partie, j'établis la validité de la conjecture de Costa-Cover sous certaines conditions et je démontre qu'en toute généralité, cette conjecture est fausse en exhibant des contre-exemples explicites. Dans une troisième partie, j'étends les résultats positifs de cette conjecture de deux manières, d'une part en généralisant la notion de volume et d'autre part en établissant des versions fonctionnelles. Enfin, je prolonge des travaux récents de Gardner et Zvavitch en améliorant la concavité des mesures convexes sous certaines hypothèses telles que la symétrie.

Mots clés : (B)-conjecture, Brunn-Minkowski, Entropie, Entropie exponentielle, Entropie de Rényi, Equation de Hamilton-Jacobi, Géométrie convexe, Isopérimétrie, Localisation, Mesure convexe, Mesure gaussienne, Théorie de l'information, Volume parallèle.

Title

Geometry of Convex Measures and Links with the Information Theory

Abstract

This thesis is devoted to the study of convex measures as well as the relationships between the Brunn-Minkowski theory and the Information theory.

I pursue the works by Costa and Cover who highlighted similarities between two fundamentals inequalities in the Brunn-Minkowski theory and in the Information theory. Starting with these similarities, they conjectured, as an analogue of the concavity of entropy power, that the n-th root of the parallel volume of every compact subset of $\mathbb{R}^n$ is concave, and I give a complete answer to this conjecture. On the other hand, I study the convex measures defined by Borell and I established for these measures a refined inequality of the Brunn-Minkowski type if restricted to convex symmetric sets.

This thesis is split in four parts. First, I recall some basic facts. In a second part, I prove the validity of the conjecture of Costa-Cover under special conditions and I show that the conjecture is false in such a generality by giving explicit counterexamples. In a third part, I extend the positive results of this conjecture by extending the notion of the classical volume and by establishing functional versions. Finally, I generalize recent works of Gardner and Zvavitch by improving the concavity of convex measures under different kind of hypothesis such as symmetries.

Keywords: (B)-conjecture, Brunn-Minkowski, Convex geometry, Convex measure, Entropy, Entropy power, Rényi entropy, Gaussian measure, Hamilton-Jacobi equation, Isoperimetry, Information theory, Localization, Parallel volume.

Travaux

Je donne ici une liste de mes publications effectuées durant cette thèse et qui sont disponibles sur ma page web personnelle, ainsi que sur les archives ouvertes HAL et arXiv.

Liste de publications

1. *On the analogue of the concavity of entropy power in the Brunn-Minkowski theory*, with Matthieu Fradelizi.
   À paraître dans Advances in Applied Mathematics.

2. *Concavity properties of extensions of the Parallel volume.*
   Soumis.

3. *On improvement of the concavity of convex measures.*
   Soumis.

Papers

Here I list my publications performed during this thesis, which are available on my personal web page, or on the open archives HAL and arXiv.

Publication list

1. *On the analogue of the concavity of entropy power in the Brunn-Minkowski theory*, with Matthieu Fradelizi.
   To appear in Advances in Applied Mathematics.

2. *Concavity properties of extensions of the Parallel volume.*
   Submitted.

3. *On improvement of the concavity of convex measures.*
   Submitted.

Remerciements

Il est maintenant temps pour moi de rédiger ce qui a été trois années de découvertes et d'immersion dans un monde sans limites qu'est la recherche mathématique. Avant d'entrer dans le détail de mes travaux effectués durant cette thèse, je souhaitais écrire quelques mots de remerciements aux personnes qui m'ont accompagné et que j'ai rencontré lors de cette thèse.

En premier lieu, je tiens à remercier profondément mon directeur de thèse Matthieu Fradelizi pour tant de raisons. Tout d'abord, c'est lui qui s'est occupé à décrocher ma bourse de thèse en montant un dossier de qualité auprès du conseil régional d'Ile de France et je n'ai rien eu à faire, à part un CV à écrire. Et l'histoire est longue entre nous, je l'ai connu pour la première fois lorsque j'étais en troisième année de Licence mathématiques et informatique à l'université Paris-Est Marne-la-Vallée car il était un de mes enseignants. Puis, c'était lui mon tuteur pour encadrer mon mémoire de première année de Master mathématiques et application. L'année suivante encore, il était mon directeur de stage de recherche de deuxième année de Master. Et aujourd'hui, Matthieu Fradelizi est mon directeur de thèse. De part ces qualités mathématiques, c'est une personne très conviviale, enjouée, motivée et toujours de bonne humeur. Ce fut un grand plaisir d'avoir travaillé avec lui toutes ces années et si je lui suis resté fidèle durant tant d'années, bien même avant la thèse, c'est une preuve de plus de sa compétence en tant qu'encadrant. Si ma thèse s'est très bien déroulée, c'est en grande partie grâce à lui car il a sû être disponible, à l'écoute de mes préoccupations, toujours présent et motivé. Je pourrais écrire encore mille mots pour pouvoir exprimer tout le positif qui le caractérise mais les mots ne sont pas assez puissants pour pouvoir exprimer cela, ni même pour pouvoir exprimer toute ma considération que j'éprouve envers lui.

D'ailleurs, le cadre même de ma thèse ne pouvait être meilleur, puisque l'université Paris-Est Marne-la-Vallée est comme ma seconde maison, j'y est passé toute ma scolarité après Bac. Les membres du laboratoire de mathématiques de Marne sont donc passés du statut de mes enseignants au statut de mes collègues, ce qui est une situation étrange au début, mais on s'y habitue. Je remercie par la même occasion le personnel administratif et technique de l'université Paris-Est Marne-la-Vallée ainsi que celui de l'école doctoral MSTIC. Je tenais également à saluer tous les doctorants que j'ai côtoyé et avec qui j'ai passé des moments forts agréables : bon courage à vous pour la suite !

D'autre part, à travers son réseau, mon directeur de thèse m'a permis de rencontrer Sergey Bobkov, Bo'az Klartag, Grigoris Paouris, Peter Pivovarov et Artem Zvavitch.

Je remercie bien évidemment toutes ces personnes pour avoir accepté de m'accueillir. Par ailleurs, je remercie grandement Bo'az Klartag qui m'a accueilli avec hospitalité à Tel-Aviv où j'y ai passé deux mois, ainsi que son étudiant Uri Grupel pour m'avoir guidé sur place. Ce fut une expérience incroyable tant mathématiquement que culturellement. J'ai rencontré toute une équipe dynamique et efficace dont font partie Shiri Artstein et Vitali Milman et j'ai été surpris de voir comment un si petit pays était si avancé scientifiquement, possédant en particulier tant de mathématiciens internationalement reconnus.

Je remercie Sergey Bobkov et Ivan Gentil qui me font l'honneur d'être les rapporteurs de ma thèse. Je leur en suis sincèrement reconnaissant. Je tiens à remercier également François Bolley, Dario Cordero-Erausquin, Olivier Guédon et Mathieu Meyer qui me font le grand plaisir de faire partie de mon jury. Je remercie également Jean-François Bercher d'avoir accepté de faire partie de mon jury.

Acknowledgements

I would like to express my heartfelt gratitude to some great mathematicians that I met during my Ph.D. and who maybe don't understand french.

I would like to thank very much Bo'az Klartag for welcoming me with hospitality in Tel-Aviv where I spent two months, and also his student Uri Grupel. It was an amazing experience as wall as mathematically than culturally. I met a dynamic team including Shiri Artstein and Vitali Milman and I was surprised to see that a so tiny country is so advanced in science, having in particular many internationally recognized mathematicians.

I thank very much Sergey Bobkov, Grigoris Paouris, Peter Pivovarov and Artem Zvavitch for accepting my visit. Also, Sergey Bobkov honoured me by being one of the reviewers of my Ph.D. thesis. I am grateful to him.

Contents

Résumé **i**

Travaux **v**

Remerciements **ix**

1 Introduction **1**

1.1 Présentation de mes principaux travaux 2
1.2 Introduction 11
1.3 The Brunn-Minkowski theory 11
1.4 Functional versions 15
1.5 The Information theory 24
1.6 Relationships between the Brunn-Minkowski theory and the Information theory 41
1.7 Convex measures 46
1.8 Publications 48

2 The analogue of the concavity of entropy power in the Brunn-Minkowski theory **49**

2.1 The conjecture of Costa-Cover 49
2.2 Basic properties of the parallel volume - links with geometric inequalities 51
2.3 The $\frac{1}{n}$-concavity of the parallel volume 56
2.4 Further analogies 69

3 A functional version of the parallel volume **71**

3.1 Functional version 71
3.2 Links with weighted Brascamp-Lieb-type inequalities 77

4 Concavity properties of convex measures **81**
4.1 The parallel μ-volume 81
4.2 On improvement of the concavity of convex measures 93

Bibliographie **105**

Dictionary **113**

Notations **119**

Index **121**

Chapter 1

Introduction

Cette thèse est consacrée à l'étude des mesures convexes ainsi qu'aux analogies entre la théorie de Brunn-Minkowski et la théorie de l'information.

L'organisation de cette thèse est la suivante. La section 1.1 est la seule partie rédigée en français et présente en détails mes travaux. Le reste est rédigée exclusivement en anglais dans un soucis d'universalité et de large diffusion de ma thèse. Le chapitre 1 se poursuit avec le rappel des notions de base de la théorie de Brunn-Minkowski et de la théorie de l'information ainsi qu'avec la mise en lumière des liens que partagent ces deux théories. Le deuxième chapitre sera consacré à mon premier article *On the analogue of the concavity of entropy power in the Brunn-Minkowski theory* [38], en commun avec Matthieu Fradelizi, à paraître dans Advances in Applied Mathematics, où nous traitons la conjecture de Costa-Cover. Lors du troisième chapitre, je détaille la seconde partie de mon deuxième article *Concavity properties of extensions of the parallel volume* [64], où je démontre des propriétés de concavité pour des versions fonctionnelles de la conjecture de Costa-Cover. Enfin, au dernier chapitre, j'explique la première partie de mon second papier [64], où il est question d'étendre et de démontrer des propriétés de concavité d'une généralisation du volume parallèle classique en étendant la mesure de Lebesgue à des mesures convexes générales. Dans ce même chapitre, j'explique également mon troisième papier *On improvement of the concavity of convex measures* [65], où il est question d'améliorer la concavité des mesures convexes sous certaines hypothèses telles que la symétries.

En annexe, on trouve une section *Dictionnaire* et une section *Notations* pour rappeler les terminologies essentielles ainsi que les notations utilisées dans cette thèse.

1.1 Présentation de mes principaux travaux

Avant d'expliciter en détails mes principaux résultats, commençons par situer la théorie de Brunn-Minkowski et la théorie de l'information en faisant une brève introduction historique.

La théorie de Brunn-Minkowski est née des travaux précurseurs de Steiner en 1840 [81] et de Brunn en 1887 [20]. Steiner, géomètre de renom, a démontré que le volume de l'ensemble des points à distance inférieure ou égale à $t \geq 0$ d'un polyèdre est une fonction polynomiale en t. Brunn, durant sa thèse, a démontré que dans une direction fixée, la racine carrée de l'aire des sections d'un ensemble convexe de l'espace est une fonction concave.

Minkowski généralisa par la suite ces deux précédents résultats. Dans une édition posthume de 1910 [66] dans laquelle ses travaux sont collectés, Minkowski démontre que le résultat de Steiner est valable pour tout ensemble convexe et en toute dimension et non plus seulement pour les polyèdres (en dimension 3). Ceci conduit à une importante sous-partie de la théorie de Brunn-Minkowski : la théorie des *volumes mixtes*. Minkowski généralise également le résultat de Brunn en démontrant la formule suivante valable pour tous ensemble convexe et en toute dimension, que l'on appelle aujourd'hui *inégalité de Brunn-Minkowski* :

$$|K+L|^{\frac{1}{n}} \geq |K|^{\frac{1}{n}} + |L|^{\frac{1}{n}}, \tag{1.1}$$

où $K+L = \{x+y; x \in K, y \in L\}$ est appelée la somme de Minkowski des ensembles K et L, où $|\cdot|$ désigne le volume et où n la dimension de l'espace sous-jacent. On déduit de cette formule le résultat de Brunn en considérant $K(t_1)$, $K(t_2)$ et $K\left(\frac{t_1+t_2}{2}\right)$ où $K(t) = \{x \in K; < x, \theta >= t\}$, $t \in \mathbb{R}$, désigne une section d'un ensemble convexe K dans une direction fixée $\theta \in \mathcal{S}^{n-1}$.

L'inégalité de Brunn-Minkowski a ensuite été généralisée aux ensembles compact, non plus nécessairement convexes, par Lusternik en 1935 [63]. Cette inégalité de Brunn-Minkowski-Lusternik est d'une puissance remarquable puisqu'elle permet entre autre de démontrer l'inégalité isopérimétrique en quelques lignes. Le problème isopérimétrique, un des plus vieux problème de l'humanité, demande quelle figure géométrique maximise la surface à périmètre donné, ou de manière duale quelle figure géométrique minimise le périmètre à surface donnée. C'est un problème de minimisation qu'il est utile de savoir résoudre.

Comme on le sait, la solution au problème isopérimétrique est le cercle (en dimension 2), et plus généralement la boule euclidienne en dimension quelconque. Nous débutons par définir la notion de *périmètre* de la manière suivante pour tout ensemble à bord *régulier* A, que l'on appelle *aire surfacique extérieure de Minkowski*,

$$|\partial A| = \lim_{\varepsilon \to 0^+} \frac{|A + \varepsilon B_2^n| - |A|}{\varepsilon},$$

où B_2^n désigne la boule euclidienne unité fermée de $\mathbb{R}^n$.

En utilisant l'inégalité de Brunn-Minkowski (1.1), valable pour tout compact, on obtient

$$|A + \varepsilon B_2^n| \geq \left(|A|^{\frac{1}{n}} + \varepsilon |B_2^n|^{\frac{1}{n}}\right)^n \geq |A| + n\varepsilon |A|^{\frac{n-1}{n}} |B_2^n|^{\frac{1}{n}}.$$

Donc, $|\partial A| \geq n|A|^{\frac{n-1}{n}}|B_2^n|^{\frac{1}{n}}$. En remarquant que $|\partial B_2^n| = n|B_2^n|$, il s'ensuit que

$$\frac{|\partial A|}{|A|^{1-\frac{1}{n}}} \geq \frac{|\partial B_2^n|}{|B_2^n|^{1-\frac{1}{n}}}.$$

En conclusion, à même volume, on obtient que le périmètre est minimisé par la boule euclidienne. Ceci donne une démonstration courte et élégante d'un résultat important.

La théorie de l'information, quant à elle, a été développée suite aux travaux précurseurs de Nyquist en 1928 [69] et Hartley la même année [48], ingénieurs en télécommunications, dont le but était entre autres de comparer l'*efficacité* de différents systèmes de communication. Pour ce faire, il fallait pouvoir mesurer l'information et une telle mesure a été développée : la notion de *quantité d'information*. L'intuition d'une telle mesure est la suivante, plus un évènement a de chance de se produire, moins il apporte de l'information. On a donc considéré la quantité $-\log(p_i)$, où p_i est la probabilité d'une réalisation. D'un point de vue mathématiques, on aurait pu prendre n'importe quelle fonction décroissante à la place de $-\log$, mais c'est cette fonction qui a été choisi à l'aide de l'expérience des ingénieurs. Suite à ces travaux précurseurs, Shannon en 1948 [78], également ingénieur en télécommunication, a développé plus profondément et plus formellement ce que l'on appelle aujourd'hui la théorie de l'information. Il a entre autres défini la notion d'*entropie* d'une variable aléatoire discrète X de loi $\{p_1, \ldots, p_n\}$ de la manière suivante :

$$H(X) = -\sum_{i=1}^{n} p_i \log(p_i),$$

ainsi que pour une variable aléatoire continue X de densité f par

$$H(X) = -\int_{\mathbb{R}^n} f(x)\log(f(x))\,\mathrm{d}x,$$

pourvu que l'intégrale existe.

Cette notion d'entropie sert en quelque sorte à mesurer l'*incertitude* d'une variable aléatoire. Par exemple, si X suit une loi binomiale de paramètre $p \in [0,1]$, alors l'entropie de X sera nulle si $p = 0$ ou $p = 1$, ce qui correspond à une variable déterministe ; le résultat est connu d'avance, il n'y a aucune incertitude. De plus, l'entropie est maximale si et seulement si $p = \frac{1}{2}$, la valeur de p pour laquelle l'issue de X est la plus incertaine. Par ailleurs, parmi toutes les lois de probabilités supportés sur un ensemble compact A, c'est la loi uniforme sur A qui maximise l'entropie, ce qui concorde donc bien avec cette idée d'incertitude.

Et c'est alors que la théorie de Brunn-Minkowski et la théorie de l'information purent *communiquer* ensembles. Plusieurs mathématiciens en théorie de l'information ont remarqué des similitudes entre ces deux théories, notamment à travaux les travaux de Costa et Cover en 1984 [25], puis par Dembo, Cover et Thomas au début des années 1990 [29], [30]. Ils ont mis en lumière des analogies entre deux inégalités fondamentales dans chaque théorie, l'inégalité de Brunn-Minkowski (1.1) et l'inégalité de l'entropie exponentielle qui affirme que pour toutes variables aléatoires à densité et indépendantes X et Y, l'inégalité suivante est vérifiée :

$$N(X+Y) \geq N(X) + N(Y), \tag{1.2}$$

où $N(X) = \frac{1}{2\pi \mathrm{e}} \exp\left(\frac{2}{n}H(X)\right)$. Par homogénéité de l'entropie, l'inégalité (1.2) est équivalente à l'inégalité entropique suivante,

$$H(X+Y) \geq H(X) + H(Y). \tag{1.3}$$

Par ailleurs, ils ont montré comment certaines méthodes pouvaient être adaptées à chacune de ces deux théories, ceci permettant de démontrer de nouvelles inégalités

Au delà de ces ressemblances, il existe une approche qui unifie ces deux inégalités. Pour ce faire, nous avons besoin de définir une nouvelle quantité en théorie de l'information, la *p-ième entropie de Rényi*. Pour $p \in [0;+\infty]$, on définit la p-ième en-

tropie de Rényi d'une variable aléatoire X de densité f par

$$H_p(X) = \frac{1}{1-p} \log \left(\int_{\mathbb{R}^n} f^p(x)\, \mathrm{d}x \right),$$

où les cas limites sont interprétés par continuité. Plus précisément, on a

$$\lim_{p \to 1} H_p(X) = H(X), \qquad \lim_{p \to 0} H_p(X) = \log(|\mathrm{supp}(f)|),$$

où $|\mathrm{supp}(f)|$ désigne le volume du support de f. On comprend donc que l'existence d'une inégalité de type entropie (1.3) pour la p-ième entropie de Rényi permettrait de déduire à la fois l'inégalité de Brunn-Minkowski (1.1) et l'inégalité de l'entropie exponentielle (1.2) par limites. Une telle inégalité existe bien et découle d'une inégalité de Beckner, Brascamp et Lieb prouvée au milieu des années 1970 [6], [18].

Finalement, on est face à deux théories développées durant des époques différentes, dans un contexte différent et des préoccupations différentes, d'une part par des géomètres et d'autre part par des ingénieurs, et finalement on constate que ces deux théories sont très proches et possèdent des racines communes.

Présentons maintenant l'essentiel de mes travaux et qui seront revus plus en détails durant les prochains chapitres de cette thèse. Lors des travaux de Costa, Cover, Dembo et Thomas, il est conjecturé des résultats dans la théorie de Brunn-Minkowski en analogie avec des résultats déjà démontrés dans la théorie de l'information. Par exemple, Costa ayant démontré dans [24] que l'entropie exponentielle d'une variable aléatoire X à laquelle on ajoute un bruit gaussien de variance t indépendant de X, en tant que fonction de t — autrement dit la fonction $t \mapsto N(X + \sqrt{t}Z)$ — est concave sur $\mathbb{R}_+$, conjecture dans un travail en commun avec Cover [25], que la racine n-ième du volume parallèle d'un ensemble compact à distance t, en tant que fonction de t, est concave sur $\mathbb{R}_+$. Dans cette thèse, j'étudie de manière détaillée cette conjecture et j'ai démontré, avec mon directeur de thèse Matthieu Fradelizi, le résultat suivant [38] :

Théorème 1. Soit A un ensemble compact de $\mathbb{R}^n$. On note, pour $t \in \mathbb{R}_+$, $V_A(t) = |A + tB_2^n|$ le volume parallèle de A à distance t. Alors,

1. En dimension 1, V_A est concave sur $\mathbb{R}_+$.

2. En dimension 2, si A est connexe, alors $V_A^{\frac{1}{2}}$ est concave sur $\mathbb{R}_+$. De plus, il existe des ensembles A non connexes tels que V_A ne soit pas concave sur $\mathbb{R}_+$.

3. En dimension $n \geq 3$, il existe des ensemble étoilés A tels que $V_A^{\frac{1}{n}}$ ne soit pas concave sur $\mathbb{R}_+$.

4. Soit A un sous-ensemble compact de $\mathbb{R}^n$. Si la fonction $\varepsilon \mapsto |\varepsilon A + B_2^n|$ est deux fois dérivable dans un voisinage de 0 de dérivée seconde continue en 0, alors il existe $t_0 \geq 0$ tel que $V_A^{\frac{1}{n}}$ est concave sur $[t_0(A); +\infty)$. En particulier, cela est valable si A est fini.

Nous conjecturons également dans le même article [38] la validité de la conjecture de Costa-Cover pour des valeurs de t suffisamment grandes et nous démontrons cette conjecture sous conditions de régularité du volume parallèle (Théorème 1, point 4.). Par ailleurs, nous mettons en évidence des liens entre la conjecture de Costa-Cover et des inégalités géométriques fondamentales telles que l'inégalité de Brunn-Minkowski ou l'inégalité isopérimétrique.

Récemment, Savaré et Toscani [75] ont démontré que la p-ième entropie exponentielle de Rényi est concave, et cela pour tout $p > 1 - \frac{2}{n}$, sans préciser ce qu'il se passait pour $p \leq 1 - \frac{2}{n}$. Le théorème 1. montre qu'une telle concavité n'est pas valable pour $p = 0$.

En géométrie convexe, il est courant d'étendre des inégalités, ceci permettant parfois de démontrer plus facilement des résultats purement géométriques, et nouant ainsi de nouveaux liens avec d'autres théories mathématiques. L'inégalité de Brunn-Minkowski peut se généraliser de plusieurs manières, nous en avons déjà vu une précédemment en considérant la p-ième entropie de Rényi. Nous allons maintenant généraliser cette inégalité en considérant cette fois-ci une version fonctionnelle. De cette version fonctionnelle on déduira la version géométrique en considérant des fonctions indicatrices d'ensemble. Dans la théorie de Brunn-Minkowski, la version fonctionnelle la plus célèbre est très certainement l'inégalité de Prékopa-Leindler prouvée par Prékopa et Leindler entre 1971 et 1973 [70], [60], [71].

Pour ce faire, considérons la fonction $h(z) = \sup_{z=\alpha x+\beta y} f(x)^\alpha g(y)^\beta$, où $\alpha, \beta \in \mathbb{R}_+$ et f, g sont deux fonctions mesurables positives définies sur $\mathbb{R}^n$. En prenant $f = 1_A$ et $g = 1_B$, où A et B sont deux ensembles compacts de $\mathbb{R}^n$, on obtient que $h(z) = 1_{\alpha A+\beta B}(z)$. La conjecture de Costa-Cover peut donc être étendu en une version fonctionnelle en considérant la fonction $h_t^{(0)}(z) = \sup_{z=x+ty} f(x)g(y)^t$, $t \in \mathbb{R}_+$.

J'ai considéré et étudié une généralisation de cette version fonctionnelle dans [64] où il est démontré le résultat suivant :

Théorème 2.

1. Soit $\gamma \geq -\frac{1}{n}$. Soient $f, g : \mathbb{R}^n \to \mathbb{R}_+$ deux fonctions γ-concave. Alors la fonction $t \mapsto \int_{\mathbb{R}^n} h_t^{(\gamma)}(z)\,\mathrm{d}z$ est $\frac{\gamma}{1+\gamma n}$-concave sur $\mathbb{R}_+$, où

$$h_t^{(\gamma)}(z) = \sup_{\substack{z=x+ty \\ f(x)>0;\ g(y)>0}} (f(x)^\gamma + tg(y)^\gamma)^{\frac{1}{\gamma}}.$$

2. Soit $\gamma \leq 0$. Soit $f : \mathbb{R} \to \mathbb{R}_+$ telle que f^γ soit une fonction positive, lipschitzienne et bornée. Définissons pour tout $y \in \mathbb{R}$, $V(y) = \frac{|y|^p}{p}$ avec $p \geq 1$, et

$$h_t^{(\gamma)}(z) = \sup_{\substack{z=x+ty \\ f(x)>0;\ V(y)>0}} (f(x)^\gamma + tV(y))^{\frac{1}{\gamma}}, \qquad h_t^{(0)}(z) = \sup_{z=x+ty} f(x)\mathrm{e}^{-tV(y)}.$$

   Si $h_t^{(\gamma)}$ est de classe C^2 et si $\lim_{z\to\pm\infty} \frac{\partial}{\partial z} h_t^{(\gamma)}(z) = 0$, alors la fonction $t \mapsto \int_{\mathbb{R}} h_t^{(\gamma)}(z)\,\mathrm{d}z$ est concave sur $\mathbb{R}_+$.

La première partie de ce résultat repose sur l'inégalité de Borell, Brascamp et Lieb [16], [19]. La deuxième partie de ce résultat repose sur une analyse précise de la solution de Hopf-Lax de l'équation de Hamilton-Jacobi.

Voyons maintenant encore une autre manière de généraliser l'inégalité de Brunn-Minkowski, cette fois-ci en généralisant la mesure de Lebesgue. Borell a étudié en 1975 [16] ce qu'on appelle aujourd'hui les *mesures s-concaves*, où s est un paramètre dans $[-\infty; +\infty]$. Ces mesures vérifient par définition l'inégalité de type Brunn-Minkowski suivante :

$$\mu((1-\lambda)A + \lambda B) \geq ((1-\lambda)\mu(A)^s + \lambda\mu(B)^s)^{\frac{1}{s}},$$

pour tout $\lambda \in [0,1]$ et tous compacts $A, B \subset \mathbb{R}^n$ tels que $\mu(A)\mu(B) > 0$. La mesure de Lebesgue apparaît alors comme étant une mesure $\frac{1}{n}$-concave. Les cas limites, $s \in \{-\infty, 0, +\infty\}$, s'interprètent par continuité. Par exemple, le cas $s = 0$ correspond à ce que l'on appelle *mesures log-concaves* qui contient la mesure gaussienne, une mesure fondamentale en probabilité. En conséquence de l'inégalité de Hölder, toute mesure s-concave est r-concave pour tout $r \leq s$. En particulier, toute mesure s-concave est

$-\infty$-concave et ces dernières sont appelées *mesures convexes*. Les mesures convexes ont la propriété d'avoir un support convexe.

Maintenant que nous avons introduit les mesures convexes, il est assez aisé d'imaginer une autre extension de la conjecture de Costa-Cover. Il suffit de remplacer la mesure de Lebesgue par une mesure s-concave et remplacer la $\frac{1}{n}$-concavité par de la s-concavité, la définition d'une fonction s-concave étant similaire à celle des mesures s-concaves. Je démontre dans [64] le résultat suivant.

Théorème 3. Soit $s \in [-\infty; \frac{1}{2}] \cup [1; +\infty]$. Soient A un ensemble compact de $\mathbb{R}$ et μ une mesure s-concave de $\mathbb{R}$. Alors, la fonction $t \mapsto V_A^\mu(t) = \mu(A + tB_2^1)$ est s-concave sur $\mathbb{R}_+$. De plus, il existe des mesures s-concaves, avec $s \in]\frac{1}{2}; 1[$, tels que V_A^μ ne soit pas s-concave sur $\mathbb{R}_+$.

Je démontre ce résultat en utilisant une technique de localisation développée par Kannan, Lovász et Simonovits dans les années 1990 [62], [57] dans sa forme établie par Fradelizi et Guédon en 2004 [36].

Par ailleurs, ce résultat est valable en toute dimension lorsque $s > 1$, puisque dans ce cas, la seule mesure s-concave non triviale est la mesure de Dirac en un point. Ce résultat est également valable en toute dimension lorsque $s = -\infty$ car la fonction $t \mapsto V_A^\mu(t)$ est croissante ; et en toute dimension pour toute valeur de s lorsque l'ensemble A est convexe. Cependant, puisque la conjecture de Costa-Cover est fausse en toute généralité en dimension 2, on ne peut pas s'attendre à obtenir les résultats du théorème 3. en dimension strictement supérieur à 1, de même pour le théorème 2.

Enfin, je discute d'une possible amélioration de la concavité des mesures convexes sous des certaines hypothèses telles que la symétrie. Précisément, je mets en avant le problème de savoir quelles sont les mesures qui satisfont une concavité au sens de Borell en fonction de la classe d'ensemble considérée :

Question 1. Pour quelle valeur s dans $[-\infty, +\infty]$, pour quelle classe $\mathcal{M}$ de mesures positives et pour quelle classe $\mathcal{C}$ de couples d'ensembles boréliens de $\mathbb{R}^n$ a-t-on pour tout $\mu \in \mathcal{M}$, pour tout $(A, B) \in \mathcal{C}$ tels que $\mu(A)\mu(B) > 0$ et pour tout $\lambda \in [0, 1]$,

$$\mu((1-\lambda)A + \lambda B) \geq ((1-\lambda)\mu(A)^s + \lambda\mu(B)^s)^{\frac{1}{s}} \quad ? \tag{1.4}$$

La partie droite de l'inégalité (1.4) doit être interprétée par continuité, c'est-à-dire par $\mu(A)^{1-\lambda}\mu(B)^{\lambda}$ pour $s = 0$, par $\min(\mu(A), \mu(B))$ pour $s = -\infty$ et par $\max(\mu(A), \mu(B))$ pour $s = +\infty$.

Borell [16] a démontré que la question 1. admet une réponse positive si $\mathcal{M}$ est la classe des mesures s-concave de $\mathbb{R}^n$ et si $\mathcal{C}$ est la classe des couples d'ensembles boréliens de $\mathbb{R}^n$.

Concernant la mesure de Lebesgue, la question 1. a été étudiée pour $s = 1$, par Bonnesen [14], et est toujours étudiée (voir par exemple [50]).

Notons que la question 1. admet une réponse positive pour $s = +\infty$ si $\mathcal{M}$ est la classe des mesures convexes et si $\mathcal{C}$ est la classe des couples d'ensembles de même mesure. En effet, on a alors pour tout $\lambda \in [0, 1]$

$$\mu((1-\lambda)A + \lambda B) \geq \inf(\mu(A), \mu(B)),$$

par définition. Puisque $\mu(A) = \mu(B)$, il s'ensuit que

$$\mu((1-\lambda)A + \lambda B) \geq \mu(A) = \max(\mu(A), \mu(A)) = \max(\mu(A), \mu(B)).$$

Ce problème fait suite à des travaux très récents de Gardner et Zvavitch [42] dans lesquels les auteurs démontrent une inégalité de type Brunn-Minkowski pour la mesure gaussienne pour des ensembles très particuliers et conjecturent que la Question 1. admet une réponse positive pour $s = \frac{1}{n}$, pour la mesure gaussienne et pour $\mathcal{C}$ la classe des couples d'ensembles convexes symétriques de $\mathbb{R}^n$; la mesure gaussienne étant définie par

$$\mathrm{d}\gamma_n(x) = \frac{1}{(2\pi)^{\frac{n}{2}}} \mathrm{e}^{-\frac{|x|^2}{2}}\, \mathrm{d}x, \quad x \in \mathbb{R}^n$$

où $|\cdot|$ désigne la norme euclidienne.

Je généralise dans [65] les résultats de Gardner et Zvavitch à des mesures plus générales ainsi qu'à une classe d'ensemble plus générale. Précisément, je démontre les résultats suivants :

Théorème 4.

1. Soit μ une mesure log-concave inconditionnelle et soit $A \subset \mathbb{R}^n$ un ensemble convexe inconditionnel. Alors, pour tous $A_1, A_2 \in \{\alpha A; \alpha > 0\}$ et pour tout $\lambda \in [0, 1]$,

nous obtenons

$$\mu((1-\lambda)A_1+\lambda A_2)^{\frac{1}{n}} \geq (1-\lambda)\mu(A_1)^{\frac{1}{n}}+\lambda\mu(A_2)^{\frac{1}{n}}.$$

2. Soit μ_i, $1 \leq i \leq n$, des mesures de densités $\phi_i : \mathbb{R} \to \mathbb{R}_+$ telles que les ϕ_i sont croissantes sur $(-\infty; 0]$ et décroissantes sur $[0; +\infty)$. Soit μ la mesure produit de $\mu_1, \ldots, \mu_n$ et soient $A, B \subset \mathbb{R}^n$ le produit de n sous-ensembles mesurables de $\mathbb{R}$ tels que $0 \in A \cap B$. Alors, pour tout $\lambda \in [0, 1]$, nous avons

$$\mu((1-\lambda)A+\lambda B)^{\frac{1}{n}} \geq (1-\lambda)\mu(A)^{\frac{1}{n}}+\lambda\mu(B)^{\frac{1}{n}}.$$

3. Soit μ_1 une mesure de densité $\phi : \mathbb{R} \to \mathbb{R}_+$, telle que ϕ est croissante sur $(-\infty; 0]$ et décroissante sur $[0; +\infty)$. Soit μ_2 une mesure borélienne $(n-1)$-dimensionnelle et soit μ la mesure produit de μ_1 et μ_2. Soit $A = A_1 \times \mathbb{R}^{n-1}$, où A_1 est un sous-ensemble mesurable de $\mathbb{R}$ et soit B un sous-ensemble mesurable de $\mathbb{R}^n$ tels que $0 \in A \cap B$. Alors, pour tout $\lambda \in [0, 1]$, nous obtenons

$$\mu((1-\lambda)A+\lambda B) \geq (1-\lambda)\mu(A)+\lambda\mu(B).$$

4. Soit μ une mesure de densité $\phi : \mathbb{R}^n \to \mathbb{R}_+$ telle que ϕ est $-\frac{1}{n-1}$-concave. Soient A, B des sous-ensembles mesurables de $\mathbb{R}^n$ tels qu'il existe $u \in \mathcal{S}^{n-1}$ tel que

$$\sup_{t\in\mathbb{R}} \mu_{n-1}(A \cap (u^\perp + tu)) = \sup_{t\in\mathbb{R}} \mu_{n-1}(B \cap (u^\perp + tu)),$$

où $\mu_{n-1}(A \cap (u^\perp + tu)) = \int_{A\cap(u^\perp+tu)} \phi(x)\,\mathrm{d}x$ et de même pour $\mu_{n-1}(B \cap (u^\perp + tu))$. Alors, pour tout $\lambda \in [0, 1]$, nous avons

$$\mu((1-\lambda)A+\lambda B) \geq (1-\lambda)\mu(A)+\lambda\mu(B).$$

Pour conclure, j'ai été confronté durant ma thèse à d'innombrables problèmes liés au domaine de la géométrie convexe et son extension non convexe. Comme on a pu le voir, il s'agit d'un domaine de recherche très actif, et dans lequel j'ai trouvé tant d'intéressantes questions ouvertes et de beaux problèmes auxquels je souhaiterais continuer à apporter ma pierre à l'édifice.

1.2 Introduction

In this thesis, I pursue the study of convex measures as well as the relationships between the Brunn-Minkowski theory and the Information theory. This thesis is situated in the fields of the Convex geometry, the Brunn-Minkowski theory and the Information theory.

The organization of the thesis is the following. I start in this first chapter by introducing the Brunn-Minkowski theory and the Information theory in a short historical approach and by explaining the starting point of some fundamental tools that arise in Convex and non-Convex geometry such as functional forms of geometric inequalities, analogies between the Brunn-Minkowski theory and the Information theory, and convex measures. The second chapter is devoted to my first paper *On the analogue of the concavity of entropy power in the Brunn-Minkowski theory* [38], joint with Matthieu Fradelizi, to appear in Advances in Applied Mathematics. In the third chapter, I explain the second part of my second paper *Concavity properties of extensions of the parallel volume* [64]. Finally, in the last chapter, I explain the first part of my second paper [64] and also my third paper *On improvement of the concavity of convex measures* [65].

In appendix, one find a section *Dictionary* and a section *Notations* that recall the basic terminologies and notations used in this thesis.

1.3 The Brunn-Minkowski theory

The Brunn-Minkowski theory was founded mainly by the works by Steiner, Brunn and Minkowski. In his Ph.D. thesis, Brunn noticed that volume of sections in a direction of a convex body has a concavity property. More precisely, he showed that the function $t \mapsto |\{x \in K; < x, \theta >= t\}|_2$ is a $\frac{1}{2}$-concave function on $\mathbb{R}$, where K is a convex body in $\mathbb{R}^3$ and $\theta \in \mathcal{S}^{n-1}$ is a direction (see Figure (1.1) below).

As his contemporaries, many of his works was stated in dimension 2 or 3 although most of his results can be generalized in higher dimension.

Thereafter, Minkowski highlighted and generalized the result of Brunn. His counterpart in mathematics is impressive and his works are collected in a posthumous edition [66]. Minkowski proved the following result, nowadays called the *Brunn-Minkowski inequality*:

Theorem 1.3.1 (Minkowski [66]). *Let K and L be two convex bodies in $\mathbb{R}^n$, then*

$$|K + L|^{\frac{1}{n}} \geq |K|^{\frac{1}{n}} + |L|^{\frac{1}{n}}. \tag{1.5}$$

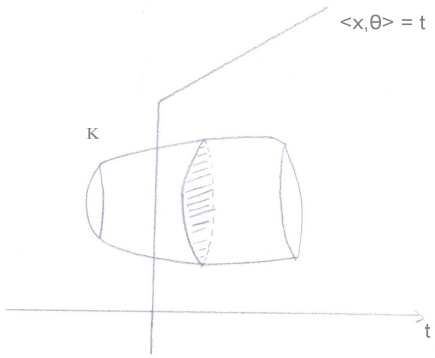

Figure 1.1: Hyperplane section of a convex body

Thereafter, Lusternik in [63] extended the Brunn-Minkowski inequality (1.5) to arbitrary measurable sets in $\mathbb{R}^n$ such that the sum is measurable. Therefore, Lusternik complete definitively (staying in geometry) the initial result of Brunn. Nowadays, one sometimes refers to the Brunn-Minkowski-Lusternik inequality for the following inequality:

Theorem 1.3.2 (Lusternik [63]). *Let A and B be two compact subsets of $\mathbb{R}^n$, then*

$$|A+B|^{\frac{1}{n}} \geq |A|^{\frac{1}{n}} + |B|^{\frac{1}{n}}. \tag{1.6}$$

The name of Lusternik is often omitted.

Replacing A by $(1-\lambda)A$ and B by λB for $\lambda \in [0,1]$, one gets the following equivalent formulation

$$|(1-\lambda)A + \lambda B|^{\frac{1}{n}} \geq (1-\lambda)|A|^{\frac{1}{n}} + \lambda |B|^{\frac{1}{n}}. \tag{1.7}$$

The Brunn-Minkowski inequality (1.7) is a fundamental inequality in mathematics. The most important reason is that this inequality solves the (classical) isoperimetric inequality in few lines. The isoperimetric inequality is a problem coming from real preoccupations, namely it asks which geometric object minimizes the perimeter at given volume, which is an interesting optimization problem. The answer is Euclidean balls (circles in dimension 2, spheres in dimension 3). Moreover, this proof of the isoperimetric inequality works in every dimension.

Let us see how the isoperimetric inequality results from the Brunn-Minkowski in-

equality (1.6). In the sequel, we define the outer Minkowski surface area by

$$|\partial A| = \lim_{\varepsilon \to 0^+} \frac{|A + \varepsilon B_2^n| - |A|}{\varepsilon},$$

whenever the limit exists.

Corollary 1.3.3 (Isoperimetric inequality)**.** *Let A be a compact subset of $\mathbb{R}^n$. Then,*

$$\frac{|\partial A|}{|A|^{1-\frac{1}{n}}} \geq \frac{|\partial B_2^n|}{|B_2^n|^{1-\frac{1}{n}}}.$$

Proof. Using Brunn-Minkowski inequality (1.6), one has

$$|A + \varepsilon B_2^n| \geq \left(|A|^{\frac{1}{n}} + \varepsilon |B_2^n|^{\frac{1}{n}}\right)^n \geq |A| + n\varepsilon |A|^{\frac{n-1}{n}} |B_2^n|^{\frac{1}{n}}.$$

Thus, $|\partial A| \geq n|A|^{\frac{n-1}{n}}|B_2^n|^{\frac{1}{n}}$. Notice that $|\partial B_2^n| = n|B_2^n|$. Hence,

$$\frac{|\partial A|}{|A|^{1-\frac{1}{n}}} \geq \frac{|\partial B_2^n|}{|B_2^n|^{1-\frac{1}{n}}}.$$

□

Another important part of the Brunn-Minkowski theory is the notion of mixed volume. This notion has been highlighted by the precursor works of Steiner in [81] who discovered that the parallel volume of special convex bodies has a polynomial expansion.

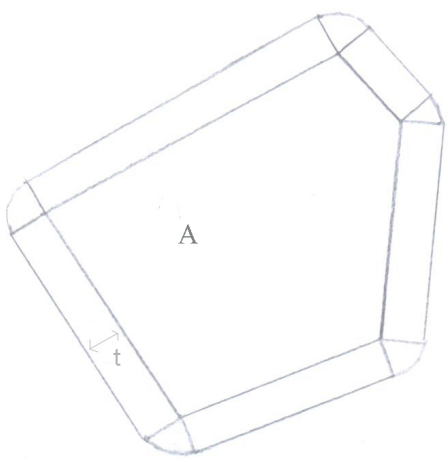

Figure 1.2: Parallel volume of a polygon

Theorem 1.3.4 (Steiner [81]). *Let A be a convex polyhedron of $\mathbb{R}^3$, then*

$$|A + tB_2^3| = a_0 + a_1 t + a_2 t^2 + a_3 t^3,$$

where a_0, a_1, a_2, a_3 are non-negative quantities depending on A and B_2^3.

In the example of Figure 1.2 above where A is a polygon, one can see with some thought that

$$|A + tB_2^2| = |A| + P(A)t + \pi t^2,$$

where $P(A)$ is the perimeter of A, and that this result holds for every polygon.

Nowadays, one refers to the *Steiner formula* for the following equality:

Theorem 1.3.5 (Steiner's formula). *Let A be a compact convex subset of $\mathbb{R}^n$, then for every $t \geq 0$,*

$$|A + tB_2^n| = \sum_{i=0}^{n} \binom{n}{i} V(A, [i]; B_2^n, [n-i]) t^{n-i},$$

where $V(A, [i]; B_2^n, [n-i])$ are called the mixed volumes of A and B_2^n.

1.4 Functional versions

One can rely the field of geometry with the field of analysis by applying functional inequalities to particular functions: indicator of sets. We will see how to derive the Brunn-Minkowski inequality from a functional inequality: the Borell-Brascamp-Lieb inequality:

Theorem 1.4.1 (Borell [16], Brascamp-Lieb [19]). *Let $\gamma \geq -\frac{1}{n}$. Let $\lambda = (\lambda_1, \dots, \lambda_m)$, where $\lambda_1, \dots, \lambda_m$ are positive numbers such that $\sum_{i=1}^m \lambda_i = 1$, and let $f_1, \dots, f_m, h : \mathbb{R}^n \to \mathbb{R}_+$ be non-negative measurable functions satisfying for every $x_1, \dots, x_m \in \mathbb{R}^n$ such that $f_1(x_1) \cdots f_m(x_m) > 0$,*

$$h(\lambda_1 x_1 + \cdots + \lambda_m x_m) \geq M_\lambda^\gamma(f_1(x_1), \dots, f_m(x_m)).$$

Then,

$$\int_{\mathbb{R}^n} h(x)\,\mathrm{d}x \geq M_\lambda^{\frac{\gamma}{1+\gamma n}} \left(\int_{\mathbb{R}^n} f_1(x)\,\mathrm{d}x, \dots, \int_{\mathbb{R}^n} f_m(x)\,\mathrm{d}x \right),$$

where

$$M_\lambda^\theta(a_1, \dots, a_m) = \begin{cases} \left(\lambda_1 a_1^\theta + \cdots + \lambda_m a_m^\theta\right)^{\frac{1}{\theta}} & \text{if } \theta \in \mathbb{R} \setminus \{0\} \\ a_1^{\lambda_1} \cdots a_m^{\lambda_m} & \text{if } \theta = 0 \\ \min(a_1, \dots, a_m) & \text{if } \theta = -\infty \\ \max(a_1, \dots, a_m) & \text{if } \theta = +\infty \end{cases}.$$

In Theorem 1.4.1, the case $\gamma > 0$ in dimension 1 has been proved by Henstock and Macbeath in [49] and the case $\gamma = 0$ has been proved by Prékopa and Leindler in [70], [60], [71].

Let us rewrite the $\gamma = 0$ case of Theorem 1.4.1 for two functions:

Theorem 1.4.2 (Prékopa-Leindler's inequality). *Let f and g be two non-negative measurable functions defined on $\mathbb{R}^n$. For every $\lambda \in [0, 1]$, one has*

$$\int_{\mathbb{R}^n} \sup_{z=(1-\lambda)x+\lambda y} f(x)g(y)\,\mathrm{d}z \geq \left(\int_{\mathbb{R}^n} f(x)^{\frac{1}{1-\lambda}}\,\mathrm{d}x \right)^{1-\lambda} \left(\int_{\mathbb{R}^n} g(y)^{\frac{1}{\lambda}}\,\mathrm{d}y \right)^{\lambda}. \tag{1.8}$$

Few years later, Beckner, Brascamp and Lieb gave another generalization of the Prékopa-Leindler inequality (1.8):

Theorem 1.4.3 (Beckner [6], Brascamp-Lieb [18]). *Let $0 \leq p, q, r \leq +\infty$ such that $\frac{1}{r} + 1 = \frac{1}{p} + \frac{1}{q}$ and $f \in L^p(\mathbb{R}^n)$, $g \in L^q(\mathbb{R}^n)$. Let us denote $c_p = \frac{p^{\frac{1}{p}}}{|p'|^{\frac{1}{p'}}}$, where $\frac{1}{p} + \frac{1}{p'} = 1$*

and similarly c_q, c_r.

If $1 \leq p, q, r \leq +\infty$, *then*

$$\sup_{f \in L^p,\, g \in L^q} \frac{\|f \star g\|_{L^r(\mathbb{R}^n)}}{\|f\|_{L^p(\mathbb{R}^n)} \|g\|_{L^q(\mathbb{R}^n)}} = \left(\frac{c_p c_q}{c_r}\right)^{\frac{n}{2}}. \tag{1.9}$$

If $0 \leq p, q, r \leq 1$, *then*

$$\inf_{f \in L^p,\, g \in L^q} \frac{\|f \star g\|_{L^r(\mathbb{R}^n)}}{\|f\|_{L^p(\mathbb{R}^n)} \|g\|_{L^q(\mathbb{R}^n)}} = \left(\frac{c_p c_q}{c_r}\right)^{\frac{n}{2}}. \tag{1.10}$$

The case $1 \leq p, q, r \leq +\infty$ in Theorem 1.4.3 has been shown simultaneously by Beckner [6] and Brascamp, Lieb [18]. However, contrary to Brascamp and Lieb, Beckner did not treat the case $0 \leq p, q, r \leq 1$.

One derives the Prékopa-Leindler inequality (1.8) from inequality (1.10) by considering

$$h_R(z) = \left(\int_{\mathbb{R}^n} f_{1-\lambda}(z-y)^{(1-\lambda)R} g_\lambda(y)^{\lambda R}\, \mathrm{d}y\right)^{\frac{1}{R-1}},$$

where $f_{1-\lambda}(x) = f\left(\frac{x}{1-\lambda}\right)$ and $g_\lambda(x) = g\left(\frac{x}{\lambda}\right)$. By approximation, one may assume that f and g are bounded and compactly supported. One then has

$$\begin{aligned}
\lim_{R \to +\infty} h_R(z) &= \sup_{y \in \mathbb{R}^n} f\left(\frac{z-y}{1-\lambda}\right)^{1-\lambda} g\left(\frac{y}{\lambda}\right)^{\lambda} \\
&= \sup_{z=(1-\lambda)x+\lambda y} f(x)^{1-\lambda} g(y)^{\lambda} \\
&:= h(z),
\end{aligned}$$

and furthermore, for $R > \max\left(\frac{1}{1-\lambda}, \frac{1}{\lambda}\right)$,

$$\begin{aligned}
\|h_R\|_{L^1(\mathbb{R}^n)} &= \int_{\mathbb{R}^n} \left(\int_{\mathbb{R}^n} f_{1-\lambda}(x-y)^{(1-\lambda)R} g_\lambda(y)^{\lambda R}\, \mathrm{d}y\right)^{\frac{1}{R-1}} \mathrm{d}x \\
&= \|f_{1-\lambda}^{(1-\lambda)R} \star g_\lambda^{\lambda R}\|_{L^{\frac{1}{R-1}}(\mathbb{R}^n)}^{\frac{1}{R-1}} \\
&\geq \left(\left(\frac{c_p c_q}{c_r}\right)^{\frac{n}{2}} \|f_{1-\lambda}^{(1-\lambda)R}\|_{L^p(\mathbb{R}^n)} \|g_\lambda^{\lambda R}\|_{L^q(\mathbb{R}^n)}\right)^{\frac{1}{R-1}},
\end{aligned}$$

where $\frac{1}{p} = (1-\lambda)R$, $\frac{1}{q} = \lambda R$. Notice that

$$\begin{aligned} \|f_{1-\lambda}^{(1-\lambda)R}\|_{L^p(\mathbb{R}^n)} &= \left((1-\lambda)^n \|f\|_{L_1(\mathbb{R}^n)}\right)^{(1-\lambda)R}, \\ \|g_\lambda^{\lambda R}\|_{L^q(\mathbb{R}^n)} &= \left(\lambda^n \|g\|_{L_1(\mathbb{R}^n)}\right)^{\lambda R}. \end{aligned}$$

Thus,

$$\|h_R\|_{L^1(\mathbb{R}^n)} \geq \left(\frac{c_p c_q}{c_r}\right)^{\frac{n}{2}\frac{1}{R-1}} \left((1-\lambda)^n \|f\|_{L_1(\mathbb{R}^n)}\right)^{(1-\lambda)\frac{R}{R-1}} \left(\lambda^n \|g\|_{L_1(\mathbb{R}^n)}\right)^{\lambda \frac{R}{R-1}}. \tag{1.11}$$

Moreover, one has

$$\lim_{R\to+\infty} \left(\frac{c_p c_q}{c_r}\right)^{\frac{n}{2}\frac{1}{R-1}} = \frac{1}{(1-\lambda)^{n(1-\lambda)}} \frac{1}{\lambda^{n\lambda}}.$$

Hence, the right hand-side in inequality (1.11) tends to $\|f\|_{L^1(\mathbb{R}^n)}\|g\|_{L^1(\mathbb{R}^n)}$ when R tends to $+\infty$, and the left hand-side tends to $\|h\|_{L^1(\mathbb{R}^n)}$.

A similar computation will be done in Theorem 1.6.1.

For $p, q, r \geq 1$, Theorem 1.4.3 is a refinement of the classical *Young inequality*:

Theorem 1.4.4 (Young's inequality [84]). *Let $1 \leq p, q, r \leq +\infty$ such that $\frac{1}{r} + 1 = \frac{1}{p} + \frac{1}{q}$ and $f \in L^p(\mathbb{R}^n)$, $g \in L^q(\mathbb{R}^n)$. Then,*

$$\frac{\|f \star g\|_{L^r}}{\|f\|_{L^p}\|g\|_{L^q}} \leq 1. \tag{1.12}$$

Another generalization of the Prékopa-Leindler inequality (1.8) is given by Barthe:

Theorem 1.4.5 (Barthe [5]). *Let $m \in \mathbb{N}^*$. For $i \in \{1, \dots, m\}$, let $n_i \in \mathbb{N}^*$ and let $\lambda_i \in [0,1]$ such that $\sum_{i=1}^m \lambda_i n_i = n$, let $B_i : \mathbb{R}^n \to \mathbb{R}^{n_i}$ be a linear surjection, let $f_i : \mathbb{R}^{n_i} \to \mathbb{R}_+$ be non-negative measurable functions. Then,*

$$\int_{\mathbb{R}^n} \sup_{x=\sum_{i=1}^m \lambda_i B_i^*(x_i)} f_1(x_1)\cdots f_m(x_m)\,\mathrm{d}x \geq \sqrt{D}\Pi_{i=1}^m \left(\int_{\mathbb{R}^n} f_i(x_i)^{\frac{1}{\lambda_i}}\,\mathrm{d}x_i\right)^{\lambda_i}, \tag{1.13}$$

where the constant D is optimal and satisfies

$$D = \inf_{A_i \in \mathcal{S}^+} \frac{\det(\sum_{i=1}^m c_i B_i^* A_i B_i)}{\Pi_{i=1}^m \det(A_i)^{c_i}}.$$

One derives the Prékopa-Leindler inequality (1.8) from the Barthe inequality (1.13) by taking for every $i \in \{1, \dots, m\}$, $n_i = n$ and $B_i = I_n$ the identity in $\mathbb{R}^n$; in this case, one has $D = 1$.

The most difficult part in the proof of inequality (1.8) is to prove the dimension 1 since the dimension n is directly derived by induction.

The Prékopa-Leindler inequality (1.8) can be seen as a reverse form of the classical *Hölder inequality*, which was in fact proved earlier by Rogers:

Theorem 1.4.6 (Rogers [73], Hölder [51])**.** *Let $\lambda \in [0,1]$ and let $f, g : \mathbb{R}^n \to \mathbb{R}_+$ be non-negative measurable functions, then*

$$\int_{\mathbb{R}^n} f(x)g(x)\,\mathrm{d}x \leq \left(\int_{\mathbb{R}^n} f(x)^{\frac{1}{1-\lambda}}\,\mathrm{d}x\right)^{1-\lambda} \left(\int_{\mathbb{R}^n} g(x)^{\frac{1}{\lambda}}\,\mathrm{d}x\right)^{\lambda}. \tag{1.14}$$

A useful inequality on means follows from the Hölder inequality (1.14).

Lemma 1.4.7. *Let $f, g : \mathbb{R}^n \to \mathbb{R}_+$ measurable and $\alpha, \beta, \gamma \in \mathbb{R} \cup \{+\infty\}$ such that $\beta + \gamma \geq 0$ and $\frac{1}{\beta} + \frac{1}{\gamma} = \frac{1}{\alpha}$. Then, for every non-negative measure μ,*

$$\|fg\|_{L^\alpha(\mu)} \leq \|f\|_{L^\beta(\mu)} \|g\|_{L^\gamma(\mu)}.$$

Proof. Consider $\alpha > 0$. Since $\frac{\beta+\gamma}{\beta\gamma} = \frac{1}{\alpha}$ and $\beta + \gamma \geq 0$, then $\beta\gamma > 0$ and then $\beta > 0$ and $\gamma > 0$. We apply Hölder's inequality (1.14) to $\widetilde{f} = f^\alpha$, $\widetilde{g} = g^\alpha$, $p = \frac{\beta}{\alpha}$, $q = \frac{\gamma}{\alpha}$. It follows that

$$\int f^\alpha g^\alpha = \int \widetilde{f}\widetilde{g} \leq \left(\int \widetilde{f}^p\right)^{\frac{1}{p}} \left(\int \widetilde{g}^q\right)^{\frac{1}{q}} = \left(\int f^\beta\right)^{\frac{\alpha}{\beta}} \left(\int g^\gamma\right)^{\frac{\alpha}{\gamma}}.$$

The proof is similar for $\alpha < 0$. □

Corollary 1.4.8. *Let $\alpha, \beta, \gamma \in \mathbb{R} \cup \{+\infty\}$ such that $\beta + \gamma \geq 0$ and $\frac{1}{\beta} + \frac{1}{\gamma} = \frac{1}{\alpha}$. Then, for every $a, b, c, d > 0$ and $\lambda \in [0,1]$,*

$$M_\lambda^\alpha(ac, bd) \leq M_\lambda^\beta(a,b) M_\lambda^\gamma(c,d). \tag{1.15}$$

Proof. Let $\alpha, \beta, \gamma \in \mathbb{R} \cup \{+\infty\}$ such that $\beta + \gamma \geq 0$ and $\frac{1}{\beta} + \frac{1}{\gamma} = \frac{1}{\alpha}$. Apply Lemma 1.4.7 to $\mu = (1-\lambda)\delta_{x_0} + \lambda\delta_{y_0}$ and f, g such that $f(x_0) = a$, $f(y_0) = b$, $g(x_0) = c$, $g(y_0) = d$. □

The Prékopa-Leindler inequality (1.8) is a functional version of the Brunn-Minkowski inequality (1.6) since one derives it by taking $f = 1_A$, $g = 1_B$ and $h = 1_{(1-\lambda)A+\lambda B}$ in

inequality (1.8). Indeed, it then follows that

$$|(1-\lambda)A+\lambda B| \geq |A|^{1-\lambda}|B|^{\lambda}. \tag{1.16}$$

By replacing A by $\frac{A}{|A|^{\frac{1}{n}}}$, B by $\frac{B}{|B|^{\frac{1}{n}}}$ and λ by $\frac{|B|^{\frac{1}{n}}}{|A|^{\frac{1}{n}}+|B|^{\frac{1}{n}}}$ in inequality (1.16), one gets the Brunn-Minkowski inequality (1.6). More generally, with the same argument, one can show that a non-negative $-\infty$-concave function and α homogeneous is in fact $\frac{1}{\alpha}$-concave.

Let us see the power of the Brunn-Minkowski inequality (1.7) by showing that in fact this inequality implies the Borell-Brascamp-Lieb inequality (Theorem 1.4.1) and thus the Prékopa-Leindler inequality (1.8). Let us first start by proving this inequality in dimension 1.

Lemma 1.4.9 (Henstock, Macbeath [49]). *Let $\lambda \in [0,1]$ and $\gamma \in [-\infty,+\infty]$. Let $f,g,h:\mathbb{R}\to\mathbb{R}_+$ be non-negative measurable functions satisfying for every $x,y\in\mathbb{R}^n$ such that $f(x)g(y)>0$,*

$$h((1-\lambda)x+\lambda y) \geq M_\lambda^\gamma(f(x),g(y)).$$

Then,

$$\int_{\mathbb{R}} h(x)\,\mathrm{d}x \geq M_\lambda^\gamma(\|f\|_\infty,\|g\|_\infty)M_\lambda^1\left(\frac{\int_{\mathbb{R}} f(x)\,\mathrm{d}x}{\|f\|_\infty},\frac{\int_{\mathbb{R}} g(x)\,\mathrm{d}x}{\|g\|_\infty}\right).$$

Proof. Let us first assume that $\max(f)=\max(g)$. Notice that

$$\int_{\mathbb{R}} h(x)\,\mathrm{d}x = \int_{\mathbb{R}}\left(\int_0^{h(x)}\mathrm{d}t\right)\mathrm{d}x = \int_0^{+\infty}|\{h\geq t\}|\,\mathrm{d}t.$$

Since $\max(f)=\max(g)$, then for every $0\leq t\leq\max(f)$, the sets $\{f\geq t\}$, $\{g\geq t\}$ are non-empty and for $t>\max(f)$ the sets $\{f\geq t\}$, $\{g\geq t\}$ are empty. Notice that for every $0\leq t\leq\max(f)$

$$\{h\geq t\}\supset(1-\lambda)\{f\geq t\}+\lambda\{g\geq t\}.$$

It follows from the Brunn-Minkowski inequality (1.7) in dimension 1, that for every $t\geq 0$

$$|\{h\geq t\}|\geq(1-\lambda)|\{f\geq t\}|+\lambda|\{g\geq t\}|.$$

Finally,

$$\begin{aligned}\int_{\mathbb{R}} h(x)\,\mathrm{d}x = \int_{\mathbb{R}} |\{h \geq t\}|\,\mathrm{d}t &\geq (1-\lambda)\int_{\mathbb{R}} |\{f \geq t\}|\,\mathrm{d}t + \lambda \int_{\mathbb{R}} |\{g \geq t\}|\,\mathrm{d}t \\ &= (1-\lambda)\int_{\mathbb{R}} f(x)\,\mathrm{d}x + \lambda \int_{\mathbb{R}} g(x)\,\mathrm{d}x \\ &= M_\lambda^1\left(\int_{\mathbb{R}} f(x)\,\mathrm{d}x, \int_{\mathbb{R}} g(x)\,\mathrm{d}x\right).\end{aligned}$$

For the general case, let us consider

$$\widetilde{f}(x) = \frac{f(x)}{\|f\|_\infty}, \quad \widetilde{g}(x) = \frac{g(x)}{\|g\|_\infty} \quad \text{and} \quad \widetilde{h}(x) = \frac{h(x)}{M_\lambda^\gamma(\|f\|_\infty, \|g\|_\infty)}.$$

Since

$$M_\lambda^\gamma(\widetilde{f}(x)\|f\|_\infty, \widetilde{g}(y)\|g\|_\infty) \geq M_\lambda^\gamma(\|f\|_\infty, \|g\|_\infty)\min(\widetilde{f}(x), \widetilde{g}(y)),$$

it follows that

$$h((1-\lambda)x + \lambda y) \geq M_\lambda^\gamma(\|f\|_\infty, \|g\|_\infty)\min(\widetilde{f}(x), \widetilde{g}(y)).$$

Hence,

$$\widetilde{h}((1-\lambda)x + \lambda y) \geq \min(\widetilde{f}(x), \widetilde{g}(y)).$$

Since $\max(\widetilde{f}) = \max(\widetilde{g})$, it follows that

$$\int_{\mathbb{R}} h(x)\,\mathrm{d}x \geq M_\lambda^\gamma(\|f\|_\infty, \|g\|_\infty) M_\lambda^1\left(\frac{\int_{\mathbb{R}} f(x)\,\mathrm{d}x}{\|f\|_\infty}, \frac{\int_{\mathbb{R}} g(x)\,\mathrm{d}x}{\|g\|_\infty}\right).$$

□

Proof of BM inequality (1.7) $\Longrightarrow$ BBL inequality (Theorem 1.4.1). Let $\gamma \geq -\frac{1}{n}$ and let $\lambda \in [0,1]$. For simplicity, we consider only three functions $f, g, h : \mathbb{R}^n \to \mathbb{R}_+$ satisfying for every $x, y \in \mathbb{R}^n$ such that $f(x)g(y) > 0$,

$$h((1-\lambda)x + \lambda y) \geq M_\lambda^\gamma(f(x), g(y)).$$

In dimension 1 ($n = 1$), it is a direct consequence of Lemma (1.4.9) and inequal-

ity (1.15) since

$$\begin{aligned}\int_{\mathbb{R}} h(x)\,\mathrm{d}x &\geq M_\lambda^\gamma(\|f\|_\infty, \|g\|_\infty) M_\lambda^1\left(\frac{\int_{\mathbb{R}} f(x)\,\mathrm{d}x}{\|f\|_\infty}, \frac{\int_{\mathbb{R}} g(x)\,\mathrm{d}x}{\|g\|_\infty}\right)\\ &\geq M_\lambda^{\frac{\gamma}{1+\gamma}}\left(\int_{\mathbb{R}} f(x)\,\mathrm{d}x, \int_{\mathbb{R}} g(x)\,\mathrm{d}x\right),\end{aligned}$$

the last inequality being valid because $\gamma \geq -1$ by assumption.

In general dimension, one has with the change of variable $t = s^{\frac{1}{\gamma}}$,

$$\int_{\mathbb{R}^n} h(x)\,\mathrm{d}x = \int_0^{+\infty} |\{h \geq t\}|\,\mathrm{d}t = \frac{1}{|\gamma|}\int_0^{+\infty} |\{h \geq s^{\frac{1}{\gamma}}\}| s^{\frac{1}{\gamma}-1}\,\mathrm{d}s.$$

Let us denote $F_s = \{f \geq s^{\frac{1}{\gamma}}\}$, $G_t = \{g \geq t^{\frac{1}{\gamma}}\}$ and $H_u = \{h \geq u^{\frac{1}{\gamma}}\}$. In the sequel, s and t are such that $s^{\frac{1}{\gamma}} \leq \|f\|_\infty$ and $t^{\frac{1}{\gamma}} \leq \|g\|_\infty$. If $x \in F_s$ and $y \in G_t$ then

$$h((1-\lambda)x + \lambda y) \geq M_\lambda^\gamma(f(x), g(y)) \geq ((1-\lambda)s + \lambda t)^{\frac{1}{\gamma}}.$$

It follows that $(1-\lambda)F_s + \lambda G_t \subset H_{(1-\lambda)s+\lambda t}$. From the Brunn-Minkowski inequality (1.7), one gets

$$|H_{(1-\lambda)s+\lambda t}| \geq |(1-\lambda)F_s + \lambda G_t| \geq \left((1-\lambda)|F_s|^{\frac{1}{n}} + \lambda |G_t|^{\frac{1}{n}}\right)^n.$$

Hence,

$$\begin{aligned}|H_{(1-\lambda)s+\lambda t}|((1-\lambda)s+\lambda t)^{\frac{1-\gamma}{\gamma}} &\geq M_\lambda^{\frac{1}{n}}(|F_s|, |G_t|) M_\lambda^{\frac{\gamma}{1-\gamma}}(s^{\frac{1-\gamma}{\gamma}}, t^{\frac{1-\gamma}{\gamma}}))\\ &\geq M_\lambda^{\frac{\gamma}{1+(n-1)\gamma}}(|F_s| s^{\frac{1-\gamma}{\gamma}}, |G_t| t^{\frac{1-\gamma}{\gamma}})),\end{aligned}$$

the last inequality being valid if $\gamma \in [-\frac{1}{n-1}, 1]$ according to inequality (1.15). Let us denote $F(s) = |F_s| s^{\frac{1-\gamma}{\gamma}}$, $G(t) = |G_t| t^{\frac{1-\gamma}{\gamma}}$ and $H(u) = |H_u| u^{\frac{1-\gamma}{\gamma}}$. We just have shown that

$$H((1-\lambda)s + \lambda t) \geq M_\lambda^{\frac{\gamma}{1+(n-1)\gamma}}(F(s), G(t)).$$

Since $\gamma \geq -\frac{1}{n}$, we can apply the theorem in dimension 1 to the functions F, G, H to get

$$\int_{\mathbb{R}} H(x)\,\mathrm{d}x \geq M_\lambda^{\frac{\gamma}{1+n\gamma}}\left(\int_{\mathbb{R}} F(x)\,\mathrm{d}x, \int_{\mathbb{R}} G(x)\,\mathrm{d}x\right),$$

that is

$$\int_{\mathbb{R}^n} h(x)\,\mathrm{d}x \geq M_\lambda^{\frac{\gamma}{1+n\gamma}}\left(\int_{\mathbb{R}^n} f(x)\,\mathrm{d}x, \int_{\mathbb{R}^n} g(x)\,\mathrm{d}x\right).$$

For the moment, we have seen that one can deduce the Borell-Brascamp-lieb inequality (Theorem 1.4.1) from the Brunn-Minkowski inequality (1.7) in the range $\gamma \in [-\frac{1}{n}, 1]$. To conclude the proof, one has to use a kind of homogeneity.

In the following, let us consider $\gamma \geq 1$. Since $M_\lambda^\gamma \geq M_\lambda^{-\frac{1}{n}}$, then

$$\int_{\mathbb{R}^n} h(x)\,\mathrm{d}x \geq \min\left(\int_{\mathbb{R}^n} f(x)\,\mathrm{d}x, \int_{\mathbb{R}^n} g(x)\,\mathrm{d}x\right).$$

First, let us assume that $\int_{\mathbb{R}^n} f(x)\,\mathrm{d}x = \int_{\mathbb{R}^n} g(x)\,\mathrm{d}x = 1$. It follows that

$$\int_{\mathbb{R}^n} h(x)\,\mathrm{d}x \geq \min(1,1) = 1 = M_\lambda^{\frac{\gamma}{1+n\gamma}}(1,1) = M_\lambda^{\frac{\gamma}{1+n\gamma}}\left(\int_{\mathbb{R}^n} f(x)\,\mathrm{d}x, \int_{\mathbb{R}^n} g(x)\,\mathrm{d}x\right).$$

For the general case, let us consider

$$F(x) = \frac{f\left(\left(\int f\right)^{\frac{\gamma}{1+n\gamma}} x\right)}{\left(\int f\right)^{\frac{1}{1+n\gamma}}}, \quad G(y) = \frac{g\left(\left(\int g\right)^{\frac{\gamma}{1+n\gamma}} y\right)}{\left(\int g\right)^{\frac{1}{1+n\gamma}}}, \quad H(z) = \frac{h(Cz)}{C^{\frac{1}{\gamma}}},$$

where $C = (1-\lambda)\left(\int f\right)^{\frac{\gamma}{1+n\gamma}} + \lambda\left(\int g\right)^{\frac{\gamma}{1+n\gamma}}$. We check that

$$\int_{\mathbb{R}^n} F(x)\,\mathrm{d}x = \int_{\mathbb{R}^n} \frac{f\left(\left(\int f\right)^{\frac{\gamma}{1+n\gamma}} x\right)}{\left(\int f\right)^{\frac{1}{1+n\gamma}}}\,\mathrm{d}x = \frac{1}{\left(\int f\right)^{\frac{1}{1+n\gamma}}} \frac{1}{\left(\int f\right)^{\frac{n\gamma}{1+n\gamma}}} \int f = 1.$$

Similarly, one has $\int G = 1$. Moreover, by letting $\mu = \frac{\lambda}{C}\left(\int g\right)^{\frac{\gamma}{1+n\gamma}}$, one has

$$\begin{aligned}
H((1-\mu)u + \mu v) &= \frac{1}{C^{\frac{1}{\gamma}}} h(C((1-\mu)u + \mu v)) \\
&= \frac{1}{C^{\frac{1}{\gamma}}} h\left((1-\lambda)\left(\int f\right)^{\frac{\gamma}{1+n\gamma}} u + \lambda\left(\int g\right)^{\frac{\gamma}{1+n\gamma}} v\right) \\
&\geq \frac{1}{C^{\frac{1}{\gamma}}}\left((1-\lambda) f\left(\left(\int f\right)^{\frac{\gamma}{1+n\gamma}} u\right)^\gamma + \lambda g\left(\left(\int g\right)^{\frac{\gamma}{1+n\gamma}} v\right)^\gamma\right)^{\frac{1}{\gamma}}
\end{aligned}$$

the last inequality being valid by assumption. It follows that

$$\begin{aligned}
H((1-\mu)u + \mu v) &\geq \left(\frac{1-\lambda}{C}\left(\int f\right)^{\frac{\gamma}{1+n\gamma}} F(u)^\gamma + \frac{\lambda}{C}\left(\int g\right)^{\frac{\gamma}{1+n\gamma}} G(v)^\gamma\right)^{\frac{1}{\gamma}} \\
&= ((1-\mu)F(u)^\gamma + \mu G(v)^\gamma)^{\frac{1}{\gamma}}.
\end{aligned}$$

Since $\int F = \int G = 1$, one gets $\int H \geq 1$, which is the desired inequality, recalling that

$$H(z) = \frac{h(Cz)}{C^{\frac{1}{\gamma}}},$$

where $C = (1-\lambda)\left(\int f\right)^{\frac{\gamma}{1+n\gamma}} + \lambda\left(\int g\right)^{\frac{\gamma}{1+n\gamma}}$. $\square$

1.5 The Information theory

The Information theory was founded mainly by the works of the engineers Nyquist [69], Hartley [48] and Shannon [78]. With an initial aim of comparing the *efficiency* of different communication systems, they define a measure which quantify the transmission of information. To this, a generic communication system has been thought of and taken up by Shannon:

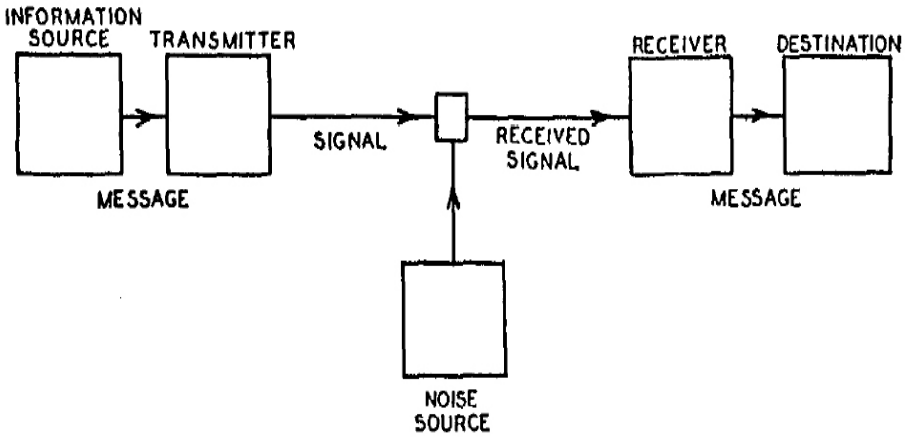

Figure 1.3: Generic communication system [78]

Shannon explained this schematic drawing as the following overview:

1. Information source: produces a message. For example, a sequence of letters as in a telegraph system.

2. Transmitter: operates on the message for transmission over a channel. For example, changing sounds into electrical currents as in telephony.

3. Channel: medium used to transmit the message from transmitter to receiver. For example, wires, band of radio frequencies.

4. Receiver: performs the inverse operation of that done by the transmitter.

5. Destination: the person (or thing) for whom the message is intended.

A theory which excludes meaning

This theory of communication excludes meaning. It is restricted to the transfer of a message. The content of the message should not have influence on ways to transport it.

Shannon said in [78]:
These semantic aspects of communication are irrelevant to the engineering problem. The significant aspect is that the actual message is one selected from a set of possible messages. The system must be designed to operate for each possible selection, not just the one which will actually be chosen since this is unknown at the time of design.

Quantity of information

In fact, the idea of measuring the information has already been proposed by the engineer Ralph Hartley in [48]. Hartley introduced the concept of quantity of information. The idea is that for a given event with realizations $x_1, \ldots, x_n$ with known probabilities $p_1, \ldots, p_n$ respectively, we then define the quantity of information associated to x_i by $-\log(p_i)$. This follows the intuition that the higher is the probability of the realisation of an event, the less this event brings information. A natural remark is that one can consider arbitrary non-increasing function instead of $-\log$.

The logarithmic function: a natural choice?

Shannon in [78] reaffirmed what was heard before by Hartley, why the logarithmic measure is more convenient:

1. Parameters of engineering importance such as time, number of relays, *etc.*, tend to vary linearly with the logarithm of the number of possibilities. For example, adding one relay to a group doubles the number of possible states of the relays.

2. It is nearer to our intuitive feeling as to the proper measure. This is closely related to 1. since we intuitively measure entities by linear comparison with common standards.

3. It is mathematically more suitable.

Shannon's entropy

Shannon introduced a new measure from the notion of quantity of information: the notion of *uncertainty*, what will soon after be called *entropy*. He was motivated to determine how much *choice* is involved in the selection of an event in a set of possible events whose only informations known are probabilities of occurrence. According to

Shannon, such a measure, denoted by $H(p_1, \ldots, p_n)$ with $p_1 + \cdots + p_n = 1$, satisfies the following conditions:

1. H should be continuous in the p_i.
2. If all p_i are equal, $p_i = \frac{1}{n}$, then H should be a monotonic increasing function of n.
3. If a choice is broken down into two successive choices, the original H should be the weighted sum of the individual values of H.

Let us make few remarks. The function H shall be denoted by $H^{(M)}$, where M is the number of variables of H. Also, the condition 3. can be written in the following way: For positive numbers $n_1, \ldots, n_r$, and probabilities associated

$$p_1 = \frac{n_1}{N}, \ldots, p_r = \frac{n_r}{N},$$

where $N = n_1 + \cdots + n_r$, then

$$H^{(N)}(\frac{p_1}{n_1}, \ldots, \frac{p_r}{n_r}) = H^{(r)}(p_1, \ldots, p_r) + \sum_{i=1}^{r} p_i H^{(n_i)}(\frac{1}{n_i}, \ldots, \frac{1}{n_i}).$$

where it is understood that

$$H^{(N)}(\frac{p_1}{n_1}, \ldots, \frac{p_r}{n_r}) = H^{(N)}(\underbrace{\frac{p_1}{n_1}, \ldots, \frac{p_1}{n_1}}_{n_1}, \ldots, \underbrace{\frac{p_r}{n_r}, \ldots, \frac{p_r}{n_r}}_{n_r}).$$

Theorem 1.5.1 (Shannon [78])**.** *The only functions H that satisfy the three conditions above are of the form:*

$$H(p_1, \ldots, p_r) = -K \sum_{i=1}^{n} p_i \log(p_i),$$

where K is a positive constant.

Proof. Let $s, m \in \mathbb{N}^*$. We first show by induction on $m \in \mathbb{N}^*$ that

$$H^{(s^m)}(\frac{1}{s^m}, \ldots, \frac{1}{s^m}) = mH^{(s)}(\frac{1}{s}, \ldots, \frac{1}{s}). \tag{1.17}$$

For $m = 1$, it is direct. Let $m \geq 1$ and assume that

$$H^{(s^m)}(\frac{1}{s^m}, \ldots, \frac{1}{s^m}) = mH^{(s)}(\frac{1}{s}, \ldots, \frac{1}{s}).$$

Applying the hypothesis 3. to $p_1 = \cdots = p_r = \frac{1}{s}$ and $n_1 = \cdots = n_r = s^m$, one gets

$$\begin{aligned} H^{(s^{m+1})}(\frac{p_1}{n_1}, \ldots, \frac{p_r}{n_r}) &= H^{(s^{m+1})}(\frac{1}{s^{m+1}}, \ldots, \frac{1}{s^{m+1}}) \\ &= H^{(s)}(\frac{1}{s}, \ldots, \frac{1}{s}) + H^{(s^m)}(\frac{1}{s^m}, \ldots, \frac{1}{s^m}) \\ &= H^{(s)}(\frac{1}{s}, \ldots, \frac{1}{s}) + mH^{(s)}(\frac{1}{s}, \ldots, \frac{1}{s}) \\ &= (m+1)H^{(s)}(\frac{1}{s}, \ldots, \frac{1}{s}). \end{aligned}$$

Let $t, s, n, m \in \mathbb{N}^*$ such that $t \leq s$ and

$$s^m \leq t^n \leq s^{m+1}.$$

Hence,

$$m \log(s) \leq n \log(t) \leq (m+1) \log(s).$$

Thus, after dividing by $n \log(s)$,

$$\left| \frac{\log(t)}{\log(s)} - \frac{m}{n} \right| \leq \frac{1}{n}. \tag{1.18}$$

We denote

$$A(n) = H^{(n)}(\frac{1}{n}, \ldots, \frac{1}{n}).$$

By hypothesis 2., the function A is increasing and we get then

$$A(s^m) \leq A(t^n) \leq A(s^{m+1}).$$

From equality (1.17), we get

$$mA(s) \leq nA(t) \leq (m+1)A(s).$$

It follows from inequality (1.18) that

$$\left| \frac{\log(t)}{\log(s)} - \frac{A(t)}{A(s)} \right| \leq \frac{2}{n}.$$

We deduce that for every $t \in \mathbb{N}^*$,

$$A(t) = K \log(t),$$

with $K > 0$ by hypothesis 2..

Let $p_1, \ldots, p_r$ be rational numbers in $(0, 1]$. We write $p_i = \frac{n_i}{N}$ with $N = n_1 + \cdots + n_r$. By hypothesis 3.,

$$A(N) = H^{(r)}(p_1, \ldots, p_r) + \sum_{i=1}^{r} p_i H^{(n_i)}\left(\frac{1}{n_i}, \ldots, \frac{1}{n_i}\right).$$

Hence,

$$\begin{aligned} H^{(r)}(p_1, \ldots, p_r) &= A(N) - \sum_{i=1}^{r} p_i A(n_i) \\ &= K \log(N) - K \sum_{i=1}^{r} p_i \log(n_i) \\ &= -K \sum_{i=1}^{r} p_i \log(p_i). \end{aligned}$$

Finally, by hypothesis 1., it follows that for every positive numbers $p_1, \ldots, p_r$ such that $p_1 + \cdots + p_r = 1$,

$$H(p_1, \ldots, p_r) = -K \sum_{i=1}^{n} p_i \log(p_i),$$

where K is a positive constant. □

Remark. The constant K can be omitted by considering a suitable base for the logarithm.

The theory

In the following, we present some basic facts about the Information theory, which are inspired from [30], [26] and [53].

Definition 1.5.2 (Discrete entropy)**.** *Let X be a discrete random variable taking values $x_1, \ldots, x_n$ with probabilities $p_1, \ldots, p_n$ respectively. The entropy of X is*

$$H(X) = -\sum_{i=1}^{n} p_i \log(pi),$$

with the convention that $0 \log(0) = 0$.

Example Consider that X follows a Bernoulli distribution with parameter $p \in [0,1]$. A direct computation shows that

$$H(X) = -p\log(p) - (1-p)\log(1-p).$$

1. If $p = 0$ or $p = 1$, then X is deterministic and as expected by historical approach of the entropy, we get $H(X) = 0$ (*no uncertainty*).

2. If $p = \frac{1}{2}$, then X is *the most random as possible* and as expected, we get $H(X) = -\log(2)$ which is maximal over all possible values of p (*the most uncertainty*) (see Figure (1.4) below).

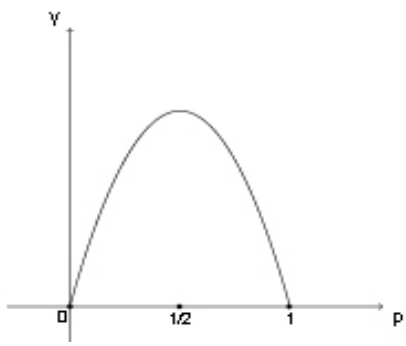

Figure 1.4: Graph of $H(X)$ with respect to p

Remark. As expected by historical approach, the discrete entropy of X does not depend on the image of X but on the probabilities of realizations.

Property 1.5.3. *Let X be discrete random variable. Then, for every $a \neq 0$ and every $b \in \mathbb{R}$, one has*

$$H(aX + b) = H(X).$$

Proof. The law of X and the law of $aX+b$ have the same probabilities of realization. □

Definition 1.5.4 (Continuous entropy)**.** *Let X be a be random vector in $\mathbb{R}^n$ with probability density function f. The entropy of X is*

$$H(X) = -\int f(x)\log(f(x))\,\mathrm{d}x.$$

Remark. The continuous entropy is also referred to as *differential entropy*. Since the entropy only depends on the probability density f, the entropy of X is sometimes written $H(f)$ instead of $H(X)$.

Property 1.5.5. *Let X be a continuous random vector in $\mathbb{R}^n$. Then, for every $a \neq 0$ and every $b \in \mathbb{R}$, one has*

$$H(aX+b) = H(X) + n\log(|a|).$$

Proof. Let us denote f the density of X. Then the density of $aX+b$ is

$$g(u) = \frac{1}{|a|^n} f\left(\frac{u-b}{a}\right).$$

Hence,

$$\begin{aligned} H(aX+b) &= -\int_{\mathbb{R}^n} f\left(\frac{u-b}{a}\right) \log\left(\frac{1}{|a|^n} f\left(\frac{u-b}{a}\right)\right) \frac{1}{|a|^n}\,\mathrm{d}u \\ &= -\int_{\mathbb{R}^n} f(x) \log\left(\frac{1}{|a|^n} f(x)\right)\,\mathrm{d}x \\ &= H(X) + n\log(|a|). \end{aligned}$$

□

Example

1. Let A be a compact subset of $\mathbb{R}^n$ and X be a random vector uniformly distributed in A. Then,

$$H(X) = -\int \frac{1_A(x)}{|A|} \log\left(\frac{1_A(x)}{|A|}\right)\,\mathrm{d}x = \frac{1}{|A|}\int_A \log(|A|)\,\mathrm{d}x = \log(|A|).$$

2. Let X be a random variable following a Gaussian distribution with expectation m and variance σ^2. Then, by translation invariance in Property 1.5.5, one can

consider that $m = 0$ and then

$$\begin{aligned} H(X) &= -\int \frac{\mathrm{e}^{-\frac{x^2}{2\sigma^2}}}{\sqrt{2\pi\sigma^2}} \log\left(\frac{\mathrm{e}^{-\frac{x^2}{2\sigma^2}}}{\sqrt{2\pi\sigma^2}}\right) \mathrm{d}x \\ &= \frac{1}{\sqrt{2\pi\sigma^2}} \int \frac{x^2}{2\sigma^2} \mathrm{e}^{-\frac{x^2}{2\sigma^2}} \mathrm{d}x + \log(\sqrt{2\pi\sigma^2}) \\ &= \log(\sqrt{2\pi \mathrm{e}}\sigma). \end{aligned}$$

3. Let X be a random vector following a Gaussian distribution with covariance matrix K, then
$$H(X) = \log(\sqrt{(2\pi e)^n \det(K)}).$$

Definition 1.5.6 (Relative entropy - Discrete case)**.** *Let X and Y be two random variables with probabilities of realization $p_1, \ldots, p_n$ and $q_1, \ldots, q_n$ respectively. The relative entropy of X with respect to Y is*

$$D(X||Y) = \sum_{i=1}^{n} p_i \log\left(\frac{p_i}{q_i}\right).$$

Definition 1.5.7 (Relative entropy - Continuous case)**.** *Let X and Y be two random vectors with probability densities f and g respectively. The relative entropy of X with respect to Y is*

$$D(X||Y) = \int f \log\left(\frac{f}{g}\right).$$

Remark. The relative entropy is also referred to as *Kullback-Leibler distance*. However, it is not a distance since it is not symmetric.

Proposition 1.5.8. *For every random variables X and Y,*

$$D(X||Y) \geq 0.$$

Proof. By Jensen's inequality,

$$-D(X||Y) = \int f \log\left(\frac{g}{f}\right) \leq \log\left(\int g\right) = \log(1) = 0.$$

□

Definition 1.5.9 (Entropy power)**.** *Let X be a continuous random vector in $\mathbb{R}^n$. The entropy power of X is*

$$N(X) = \frac{1}{2\pi \mathrm{e}} \mathrm{e}^{\frac{2}{n}H(X)},$$

where $H(X)$ is the entropy of X.

Property 1.5.10. *Let X be a continuous random vector in $\mathbb{R}^n$. Then, for every $a \neq 0$ and every $b \in \mathbb{R}$, one has*

$$N(aX + b) = a^2 N(X).$$

Proof. Using Property 1.5.5, one gets

$$N(aX+b) = \frac{1}{2\pi \mathrm{e}} \mathrm{e}^{\frac{2}{n}H(aX+b)} = \frac{1}{2\pi \mathrm{e}} \mathrm{e}^{\frac{2}{n}(n\log(|a|)+H(X))} = a^2 N(X).$$

□

Definition 1.5.11 (Score function)**.** *Let X be a continuous random vector in $\mathbb{R}^n$ with differentiable probability density f. The score function of X is*

$$\rho_X(x) = \frac{\nabla f(x)}{f(x)}, \quad x \in \mathbb{R}^n.$$

Definition 1.5.12 (Fisher information)**.** *Let X be a continuous random vector in $\mathbb{R}^n$ with score function ρ_X. The Fisher information of X is*

$$I(X) = \mathbb{E}_X[|\rho_X|^2] = \int_{\mathbb{R}^n} \frac{|\nabla f(x)|^2}{f(x)} \, \mathrm{d}x.$$

Property 1.5.13. *Let X be a continuous random vector in $\mathbb{R}^n$. Then, for every $a \neq 0$ and every $b \in \mathbb{R}$, one has*

$$I(aX + b) = \frac{1}{a^2} I(X).$$

Proof. Let us denote f the density of X. Then the density of $aX + b$ is

$$g(u) = \frac{1}{|a|^n} f\left(\frac{u-b}{a}\right).$$

It follows that,

$$I(aX+b) = \int_{\mathbb{R}^n} \frac{\frac{1}{|a|^{2n+2}} |\nabla f\left(\frac{u-b}{a}\right)|^2}{\frac{1}{|a|^n} f\left(\frac{u-b}{a}\right)} \, \mathrm{d}u = \frac{1}{a^2} \int_{\mathbb{R}^n} \frac{|\nabla f(x)|^2}{f(x)} \, \mathrm{d}x = \frac{1}{a^2} I(X).$$

□

Definition 1.5.14 (p-th Rényi entropy)**.** *Let $p \in (0,1) \cup (1,+\infty)$. Let X be a continuous random vector in $\mathbb{R}^n$. The p-th Rényi entropy of X is*

$$H_p(X) = \frac{1}{1-p} \log \left(\int_{\mathbb{R}^n} f^p(x)\, \mathrm{d}x \right)$$

Property 1.5.15. *Let X be a continuous random vector in $\mathbb{R}^n$. Then, for every $a \neq 0$ and every $b \in \mathbb{R}$, one has*

$$H_p(aX+b) = H_p(X) + n \log(|a|).$$

Proof. The proof is similar as the proof of Property 1.5.5. □

Proposition 1.5.16. *Let X be a continuous random vector in $\mathbb{R}^n$ with probability density f. Let us denote $\mathrm{supp}(f)$ the support or f.*

1. *If $|\mathrm{supp}(f)| < +\infty$, then $\lim_{p\to 0} H_p(X) = \log(|\mathrm{supp}(f)|)$.*

2. $\lim_{p\to 1} H_p(X) = H(X)$.

3. $\lim_{p\to +\infty} H_p(X) = -\log(\|f\|_\infty)$.

Proof. 1. One has,

$$\begin{aligned}
\log \left(\int f^p(x)\, \mathrm{d}x \right) &= \log \left(\int_{\{f>0\}} \mathrm{e}^{p \log(f(x))}\, \mathrm{d}x \right) \\
&= \log \left(\int_{\{f>0\}} [1 + p \log(f(x)) + o(p)]\, \mathrm{d}x \right) \\
&= \log(|\mathrm{supp}(f)|) + \log \left(1 + \frac{p}{|\mathrm{supp}(f)|} \int [\log(f(x)) + o(1)]\, \mathrm{d}x \right) \\
&= \log(|\mathrm{supp}(f)|) + \frac{p}{|\mathrm{supp}(f)|} \int [\log(f(x)) + o(1)]\, \mathrm{d}x + o(p).
\end{aligned}$$

Then,

$$\lim_{p\to 0} H_p(X) = \log(|\mathrm{supp}(f)|).$$

2. One has, setting $P = p - 1$,

$$\begin{aligned} H_p(X) &= -\frac{1}{P}\log\left(\int f^P(x)f(x)\,\mathrm{d}x\right) \\ &= -\frac{1}{P}\log\left(\int [1 + P\log(f(x)) + o(p)]f(x)\,\mathrm{d}x\right) \\ &= -\frac{1}{P}\log\left(1 + P\int [\log(f(x)) + o(1)]f(x)\,\mathrm{d}x\right) \\ &= -\int [\log(f(x)) + o(1)]f(x)\,\mathrm{d}x + o(1). \end{aligned}$$

Then,

$$\lim_{p\to 1} H_p(X) = H(X).$$

3. One has,

$$H_p(X) = \frac{1}{1-p}\log\left(\int_{\mathbb{R}^n} f^p(x)\,\mathrm{d}x\right) = -\log\left(\int_{\mathbb{R}^n} f^{p-1}(x)f(x)\,\mathrm{d}x\right)^{\frac{1}{p-1}}.$$

It follows that

$$\lim_{p\to+\infty} H_p(X) = -\log(\|f\|_\infty).$$

□

Distributions that maximise entropy

The next proposition reinforce Shannon's intuition about his notion of uncertainty and therefore the mathematical definition of Shannon's entropy is satisfactory in this sense.

Proposition 1.5.17. *Let A be a compact subset of $\mathbb{R}^n$. Among all random vectors compactly supported in A, the entropy is maximum for the uniform distribution on A.*

Proof. Let X be a random vector in $\mathbb{R}^n$ supported in A and Y be a random vector following the uniform distribution on A. Then, using Proposition 1.5.8,

$$0 \le D(X||Y) = \int_A f(x)\log(f(x)|A|)\,\mathrm{d}x = -H(X) + \log(|A|) = -H(X) + H(Y).$$

□

The next proposition put forward the Gaussian distribution in Information theory.

Proposition 1.5.18. *For a given variance, the Gaussian distribution maximise the entropy.*

Proof. Let X be a random vector in $\mathbb{R}^n$ with probability density f and covariance matrix (K_{ij}) and Y be a random variable following the Gaussian distribution ϕ with covariance matrix (K_{ij}). Recall that

$$\phi(x) = \frac{1}{(2\pi)^{\frac{n}{2}} \det(K)} \mathrm{e}^{-\frac{x^t K^{-1} x}{2}}.$$

By assumption,

$$\int f(x) x_i x_j \, \mathrm{d}x = K_{ij} = \int \phi(x) x_i x_j \, \mathrm{d}x.$$

Using Proposition 1.5.8, it follows that

$$0 \leq D(X||Y) = \int f \log(f) - \int f \log(\phi) = \int f \log(f) - \int \phi \log(\phi) = -H(X) + H(Y).$$

□

de Bruijn's identity

The de Bruijn identity rely two important quantities in Information theory, the entropy and the Fisher information.

Proposition 1.5.19 (de Bruijn's identity [80])**.** *Let X be a continuous random vector in $\mathbb{R}^n$ with finite covariances and Z be a standard Gaussian random vector independent of X. Then, for every $t \geq 0$,*

$$\frac{\mathrm{d}}{\mathrm{d}t} H(X + \sqrt{t}Z) = \frac{1}{2} I(X + \sqrt{t}Z). \tag{1.19}$$

Proof. Let us denote f_t the density of $X + \sqrt{t}Z$. A direct calculation shows that f_t satisfies the heat equation:

$$\frac{\partial}{\partial t} f_t(x) = \frac{1}{2} \Delta f_t(x),$$

where $\Delta = \sum_{i=1}^{n} \frac{\partial^2}{\partial x_i^2}$ denotes the Laplace operator. It follows that

$$\begin{aligned}
\frac{\mathrm{d}}{\mathrm{d}t} H(X+\sqrt{t}Z) &= -\int \frac{\partial}{\partial t} f_t(x) \log(f_t(x))\,\mathrm{d}x - \int f_t(x) \frac{\partial}{\partial t} \log(f_t(x))\,\mathrm{d}x \\
&= -\int \frac{1}{2} \Delta f_t(x) \log(f_t(x))\,\mathrm{d}x \\
&= \frac{1}{2} \int \nabla f_t(x) \cdot \nabla \log(f_t(x))\,\mathrm{d}x \\
&= \frac{1}{2} \int \frac{\nabla f_t(x) \cdot \nabla f_t(x)}{f_t(x)}\,\mathrm{d}x \\
&= \frac{1}{2} I(X+\sqrt{t}Z).
\end{aligned}$$

□

The Blachman-Stam inequality and the EPI

We present in this subsection an interesting inequality – the Blachman-Stam inequality – that simply imply important inequalities in Information theory such that the entropy power inequality (EPI), via de Bruijn's identity (1.19). The entropy power inequality was established by Shannon in [78]:

Theorem 1.5.20 (Entropy power inequality [78]). *Let X and Y be two independent continuous random vectors in $\mathbb{R}^n$. Then,*

$$N(X+Y) \geq N(X) + N(Y). \tag{1.20}$$

Notice that inequality (1.20) is equivalent to

$$H(\sqrt{\lambda}X + \sqrt{1-\lambda}Y) \geq \lambda H(X) + (1-\lambda) H(Y), \tag{1.21}$$

for every $\lambda \in [0,1]$. Indeed, by replacing X by $\sqrt{\lambda}X$ and Y by $\sqrt{1-\lambda}Y$, $\lambda \in [0,1]$, in inequality (1.20) and using concavity of the logarithm, one gets inequality (1.21). Conversely, by replacing X by $\frac{X}{\sqrt{\lambda}}$ and Y by $\frac{Y}{\sqrt{1-\lambda}}$, where $\lambda = \frac{N(X)}{N(X)+N(Y)}$, in inequality (1.21), one gets inequality (1.20).

We present a proof of the entropy power inequality (1.20) given by Blachman in [7]. The proof uses the Blachman-Stam inequality.

Theorem 1.5.21 (Blachman [7], Stam [80]). *Let X and Y be two independent continuous random vectors in $\mathbb{R}^n$. Then,*

$$\frac{1}{I(X+Y)} \geq \frac{1}{I(X)} + \frac{1}{I(Y)}. \tag{1.22}$$

For the proof of the Blachman-Stam inequality (1.22), we will follow the book of Johnson [53].

Lemma 1.5.22. *Let X and Y be two independent random vectors. Let us denote $Z = X+Y$. Let us denote ρ_X (resp. ρ_Y, ρ_Z) the score function of X (resp. Y,Z). Then,*

$$\rho_Z(z) = \mathbb{E}[\rho_X(X)|Z=z] = \mathbb{E}[\rho_Y(Y)|Z=z].$$

Proof. Let us denote f (resp. g, h) the density of X (resp. Y,Z). One has

$$h(z) = \int f(x)g(z-x)\,\mathrm{d}x.$$

Thus,

$$\begin{aligned}
\frac{\partial h}{\partial z_i}(z) &= \int f(x)\frac{\partial}{\partial z_i}g(z-x)\,\mathrm{d}x \\
&= -\int f(x)\frac{\partial}{\partial x_i}g(z-x)\,\mathrm{d}x \\
&= \int \left(\frac{\partial}{\partial x_i}f(x)\right) g(z-x)\,\mathrm{d}x.
\end{aligned}$$

where one uses an integration by parts in the last equality. Hence,

$$\frac{\frac{\partial h}{\partial z_i}(z)}{h(z)} = \int \left(\frac{\partial}{\partial x_i}f(x)\right)\frac{g(z-x)}{h(z)}\,\mathrm{d}x = \int \left(\frac{\frac{\partial}{\partial x_i}f(x)}{f(x)}\right)\frac{f(x)g(z-x)}{h(z)}\,\mathrm{d}x.$$

Thus,

$$(\rho_Z(z))_i = \mathbb{E}[(\rho_X(X))_i\,|Z=z].$$

With the same argument, one has

$$(\rho_Z(z))_i = \mathbb{E}[(\rho_Y(Y))_i\,|Z=z].$$

□

Lemma 1.5.23. *Let X and Y be two independent random vectors. Let $\lambda \in [0,1]$. Then,*

$$I(X+Y) \leq \lambda^2 I(X) + (1-\lambda)^2 I(Y).$$

Proof. From Lemma 1.5.22, one has

$$\rho_Z(z) = \mathbb{E}[\rho_X(X)|Z=z] = \mathbb{E}[\rho_Y(Y)|Z=z].$$

Thus, for every $\lambda \in [0,1]$,

$$\rho_Z(z) = \mathbb{E}[\lambda\rho_X(X) + (1-\lambda)\rho_Y(Y)|Z=z].$$

Hence,

$$\begin{aligned} I(X+Y) &= \mathbb{E}[\rho_Z(z)^2] \\ &= \mathbb{E}[\mathbb{E}[\lambda\rho_X(X) + (1-\lambda)\rho_Y(Y)|Z=z]^2] \\ &\leq \mathbb{E}[\lambda^2\rho_X(X)^2 + (1-\lambda)^2\rho_Y(Y)^2 + 2\lambda(1-\lambda)\rho_X(X)\rho_Y(Y)] \\ &= \lambda^2 I(X) + (1-\lambda)^2 I(Y). \end{aligned}$$

The last equality follows from

$$\mathbb{E}[\rho_X(X)\rho_Y(Y)] = \mathbb{E}[\rho_X(X)]\mathbb{E}[\rho_Y(Y)] \quad \text{and} \quad \mathbb{E}[\rho_X(X)] = 0.$$

□

Proof of Theorem 1.5.21. From Lemma 1.5.23, one has

$$I(X+Y) \leq \min_{\lambda\in[0,1]} \lambda^2 I(X) + (1-\lambda)^2 I(Y).$$

A direct study of the function $\lambda \mapsto \lambda^2 I(X) + (1-\lambda)^2 I(Y)$ shows that the minimum is reached for $\lambda = I(Y)/(I(X)+I(Y))$. It follows that

$$\frac{1}{I(X+Y)} \geq \frac{1}{I(X)} + \frac{1}{I(Y)}.$$

□

Two consequences follow from the Blachman-Stam inequality and de Bruijn's identity.

proof of entropy power inequality (1.20). Let X_1, Y_1 be two independent random vectors and $\lambda, t \in [0,1]$. Let X_0, Y_0 be standard Gaussian random vector independent of X_1, Y_1 and of each other.

Let us denote $X_t = \sqrt{t}X_1 + \sqrt{1-t}X_0$, $Y_t = \sqrt{t}Y_1 + \sqrt{1-t}Y_0$ and $V_t = \sqrt{\lambda}X_t + \sqrt{1-\lambda}Y_t$. One has

$$V_t = \sqrt{t}(\sqrt{\lambda}X_1 + \sqrt{1-\lambda}Y_1) + \sqrt{1-t}(\sqrt{\lambda}X_0 + \sqrt{1-\lambda}Y_0) = \sqrt{t}V_1 + \sqrt{1-t}V_0.$$

Let us denote $s(t) = H(V_t) - \lambda H(X_t) - (1-\lambda)H(Y_t)$. The entropy power inequality (1.20) is equivalent to $s(1) \geq 0$ (*c.f.* inequality (1.21)). Notice that V_0 is a standard Gaussian random vector, then $s(0) = 0$. It is then sufficient to prove that $s'(t) \geq 0$ to get the entropy power inequality. One has

$$s(t) = H(V_1 + \sqrt{\frac{1-t}{t}}V_0) - \lambda H(X_1 + \sqrt{\frac{1-t}{t}}X_0) - (1-\lambda)H(Y_1 + \sqrt{\frac{1-t}{t}}Y_0),$$

then

$$s'(t) = -\frac{1}{2t^2}\left(I(V_1 + \sqrt{\frac{1-t}{t}}V_0) - \lambda I(X_1 + \sqrt{\frac{1-t}{t}}X_0) - (1-\lambda)I(Y_1 + \sqrt{\frac{1-t}{t}}Y_0)\right).$$

It follows from Lemma (1.5.23) and the scaling property $I(X) = \alpha^2 I(\alpha X)$ that

$$2ts'(t) = -I(V_t) + \lambda I(X_t) + (1-\lambda)I(Y_t) \geq 0.$$

□

Corollary 1.5.24 (Concavity of entropy power)**.** *Let X be a continuous random vector in $\mathbb{R}^n$ and let Z be a standard Gaussian random vector independent of X. Then, the function $t \mapsto N(X + \sqrt{t}Z)$ is concave on $\mathbb{R}_+$.*

Proof. Recall that $N(X + \sqrt{t}Z) = \frac{1}{2\pi e} e^{\frac{2}{n}H(X+\sqrt{t}Z)}$. Then,

$$\begin{aligned}\frac{d}{dt}N(X+\sqrt{t}Z) &= \frac{2}{n}N(X+\sqrt{t}Z)\frac{d}{dt}H(X+\sqrt{t}Z) \\ &= \frac{1}{n}N(X+\sqrt{t}Z)I(X+\sqrt{t}Z) \qquad \text{(identity (1.19))}.\end{aligned}$$

$$\begin{aligned}\frac{\mathrm{d}^2}{\mathrm{d}t^2}N(X+\sqrt{t}Z) &= \frac{1}{n}N(X+\sqrt{t}Z)\left(\frac{\mathrm{d}}{\mathrm{d}t}I(X+\sqrt{t}Z)+\frac{1}{n}I(X+\sqrt{t}Z)^2\right)\\ &\leq 0 \qquad \text{(Proposition (1.6.3), proved thereafter).}\end{aligned}$$

□

Nowadays, the classical Information theory presented above is sometimes called *the Shannon Information theory* or *the Hartley-Shannon Information theory*.

1.6 Relationships between the Brunn-Minkowski theory and the Information theory

Many mathematicians have made the bridge between the Brunn-Minkowski theory and the Information theory, notably with the precursor works of Costa, Cover, Dembo and Thomas in [25], [29], [30]. This link is realized through fundamentals inequalities in each theory: the Brunn-Minkowski inequality (1.7) and the entropy power inequality (1.20). The following theorem provide a unifying view between the Brunn-Minkowski inequality (1.7) and the entropy power inequality (1.20):

Theorem 1.6.1 (Rényi entropy inequality)**.** *Let $\lambda \in [0,1]$. Let $0 < r \leq +\infty$, $r \neq 1$. Let p, q such that $\frac{1}{p'} = \frac{\lambda}{r'}$ and $\frac{1}{q'} = \frac{1-\lambda}{r'}$, where p' is the conjugate of p defined by $\frac{1}{p} + \frac{1}{p'} = 1$, and similarly for q', r'. Let X, Y be two independent random vectors. Then,*

$$\begin{aligned} H_r(\sqrt{\lambda}X + \sqrt{1-\lambda}Y) - \lambda H_p(X) - (1-\lambda)H_q(Y) \\ \geq H_r(\phi_{Id}) - \lambda H_p(\phi_{Id}) - (1-\lambda)H_q(\phi_{Id}), \end{aligned}$$

where ϕ_{Id} denotes the density of a Gaussian random vector whose covariance matrix is Identity.

Proof. Let f be the density of $\sqrt{\lambda}X$ and g be the density of $\sqrt{1-\lambda}Y$. Notice that

$$\begin{aligned} H_p(\sqrt{\lambda}X) &= -p' \log(\|f\|_{L^p}) \\ H_q(\sqrt{1-\lambda}Y) &= -q' \log(\|g\|_{L^q}) \\ H_r(\sqrt{\lambda}X + \sqrt{1-\lambda}Y) &= -r' \log(\|f \star g\|_{L^r}). \end{aligned}$$

The argument is similar for $r > 1$ or $0 < r < 1$. Let us assume that $r > 1$, then $r' \geq 0$. By applying Theorem 1.4.3, one gets

$$\frac{\|f \star g\|_{L^r}}{\|f\|_{L^p}\|g\|_{L^q}} \leq \left(\frac{c_p c_q}{c_r}\right)^{\frac{n}{2}},$$

namely

$$-r' \log(\|f \star g\|_{L^r}) + r' \log(\|f\|_{L^p}) + r' \log(\|g\|_{L^q}) \geq -r' \frac{n}{2} \log\left(\frac{c_p c_q}{c_r}\right).$$

By assumption, $r' = p'\lambda = q'(1-\lambda)$. Thus,

$$H_r(\sqrt{\lambda}X + \sqrt{1-\lambda}Y) - \lambda H_p(\sqrt{\lambda}X) - (1-\lambda)H_q(\sqrt{1-\lambda}Y) \geq -r'\frac{n}{2}\log\left(\frac{c_p c_q}{c_r}\right),$$

Then, from homogeneity of the entropy,

$$\begin{aligned} &H_r(\sqrt{\lambda}X + \sqrt{1-\lambda}Y) - \lambda H_p(X) - (1-\lambda)H_q(Y) \\ &\quad \geq -r'\frac{n}{2}\log\left(\frac{c_p c_q}{c_r}\right) + \frac{n}{2}\lambda\log(\lambda) + \frac{n}{2}(1-\lambda)\log(1-\lambda). \end{aligned}$$

Notice that

$$\begin{aligned} \log\left(\frac{c_p c_q}{c_r}\right) &= -\frac{\lambda}{1-p}\log\left(\frac{1}{p}\right) - \frac{1-\lambda}{1-q}\log\left(\frac{1}{q}\right) + \frac{1}{1-r}\log\left(\frac{1}{r}\right) \\ &\quad +\lambda\log(p') + (1-\lambda)\log(q') - \log(r') \end{aligned}$$

and

$$H_p(\phi_{Id}) = \frac{n}{2}\left(\log(2\pi) + \frac{1}{1-p}\log\left(\frac{1}{p}\right)\right).$$

Hence,

$$\begin{aligned} -r'\frac{n}{2}\log\left(\frac{c_p c_q}{c_r}\right) &= H_r(\phi_{Id}) - \lambda H_p(\phi_{Id}) - (1-\lambda)H_q(\phi_{Id}) \\ &\quad +\frac{n}{2}(\lambda\log(p') + (1-\lambda)\log(q') + \log(r')). \end{aligned}$$

using $r' = p'\lambda = q'(1-\lambda)$, one gets

$$\frac{n}{2}(\lambda\log(p') + (1-\lambda)\log(q') + \log(r')) = -\frac{n}{2}(\lambda\log(\lambda) + (1-\lambda)\log(1-\lambda)).$$

It follows that

$$\begin{aligned} &-r'\frac{n}{2}\log\left(\frac{c_p c_q}{c_r}\right) + \frac{n}{2}\lambda\log(\lambda) + \frac{n}{2}(1-\lambda)\log(1-\lambda) \\ &\quad = H_r(\phi_{Id}) - \lambda H_p(\phi_{Id}) - (1-\lambda)H_q(\phi_{Id}). \end{aligned}$$

Finally,

$$\begin{aligned} &H_r(\sqrt{\lambda}X + \sqrt{1-\lambda}Y) - \lambda H_p(X) - (1-\lambda)H_q(Y) \\ &\quad \geq H_r(\phi_{Id}) - \lambda H_p(\phi_{Id}) - (1-\lambda)H_q(\phi_{Id}). \end{aligned}$$

□

Consequence 1. [Brunn-Minkowski inequality (1.7)]
Let $\lambda \in [0,1]$. Let X and Y be two independent random vectors. Let us recall that

$$\frac{p-1}{p} = \lambda \frac{r-1}{r} \quad \text{and} \quad \frac{q-1}{q} = (1-\lambda)\frac{r-1}{r}.$$

It follows that

$$\left(\frac{\lambda}{1-p} + \frac{1-\lambda}{1-q}\right) \log\left(\frac{1}{r}\right) = \frac{1}{1-r}\log\left(\frac{1}{r}\right) + \frac{r}{1-r}\log\left(\frac{1}{r}\right).$$

Hence, one has

$$\begin{aligned}
& \lim_{r\to 0} H_r(\phi_{Id}) - \lambda H_p(\phi_{Id}) - (1-\lambda) H_q(\phi_{Id}) \\
= \; & \frac{n}{2}\lim_{r\to 0}\left(\frac{1}{1-r}\log\left(\frac{1}{r}\right) - \frac{\lambda}{1-p}\log\left(\frac{1}{p}\right) - \frac{1-\lambda}{1-q}\log\left(\frac{1}{q}\right)\right) \\
= \; & \frac{n}{2}\lim_{r\to 0}\left(\frac{-r}{1-r}\log\left(\frac{1}{r}\right) - \frac{\lambda}{1-p}\log\left(\frac{r}{p}\right) - \frac{1-\lambda}{1-q}\log\left(\frac{r}{q}\right)\right) \\
= \; & \frac{n}{2}\left(-\lambda\log(\lambda) - (1-\lambda)\log(1-\lambda)\right).
\end{aligned}$$

By replacing X by $\sqrt{\lambda}X$ and Y by $\sqrt{1-\lambda}Y$, one gets

$$H_0(\lambda X + (1-\lambda)Y) \geq \lambda H_0(X) + (1-\lambda)H_0(Y).$$

By taking X uniformly distributed on $A \subset \mathbb{R}^n$ and Y uniformly distributed on $B \subset \mathbb{R}^n$, one gets

$$\log(|\lambda X + (1-\lambda)Y|) \geq \lambda \log(|X|) + (1-\lambda)\log(|Y|).$$

Consequence 2. [Entropy power inequality (1.20)]
Let $\lambda \in [0,1]$. Let X and Y be two independent random vectors. Using that $H(\phi_{Id})$ is finite, one gets by tending r to 1 in Theorem 1.6.1 that

$$H(\sqrt{\lambda}X + \sqrt{1-\lambda}Y) \geq \lambda H(X) + (1-\lambda)H(Y).$$

A kind of dictionary

The objects of each theories are in correspondence with each other: to the compact sets in the Brunn-Minkowski theory correspond the random vectors in the Information theory, the Gaussian random vectors play the same role as the Euclidean balls, the entropy power N corresponds to the $1/n$ power of the volume $|\cdot|^{1/n}$ and, taking logarithms, the entropy H is the analogue of the logarithm of the volume $\log|\cdot|$. However, an interesting problem is to understand what can be the analogue of the independence in the Brunn-Minkowski theory.

Let us summarize these analogies in the following table:

Information theory	Brunn-Minkowski theory
Random vector X	Compact A
Vector sum $X+Y$	Minkowski sum $A+B$
Gaussian Z	Euclidean ball B_2^n
$N(X)$	$\lvert A\rvert^{\frac{1}{n}}$
$H(X)$	$\log(\lvert A\rvert)$
Independence	Convexity?

Table 1.1: Analoguous objects

Notice that if X has a uniform distribution on a measurable set $A \subset \mathbb{R}^n$, then $H(X) = \log(|A|)$.

Isoperimetric type inequalities in Information theory

Since there are similarities between the Brunn-Minkowski inequality (1.6) and the entropy power inequality (1.20), a natural idea is to try to derive new inequalities in Information theory from the entropy power inequality in the same way that we have seen in Chapter 1 how to derive the classical isoperimetric inequality from the Brunn-Minkowski inequality.

Proposition 1.6.2 (Isoperimetric inequality for entropies [30]). *Let X be a continuous random vector. Then,*

$$\frac{1}{n} I(X) N(X) \geq 1.$$

Proof. By taking $Y = \sqrt{t} Z$ in inequality (1.20), where Z is a standard Gaussian random vector independent of X, one gets using $N(\sqrt{t} Z) = t$,

$$\frac{1}{t}(N(X + \sqrt{t} Z) - N(X)) \geq 1,$$

and by tending t to 0, one gets

$$\frac{\mathrm{d}}{\mathrm{d}t} N(X + \sqrt{t} Z)\Big|_{t=0} \geq 1.$$

Using de Bruijn's identity (1.19), it follows that

$$\frac{1}{n} I(X) N(X) \geq 1.$$

□

Proposition 1.6.3 (Isoperimetric inequality for Fisher information [30]). *Let X be a continuous random vector and Z be a standard Gaussian random vector independent of X. Then,*

$$\frac{1}{n} I(X)^2 + \frac{\mathrm{d}}{\mathrm{d}t} I(X + \sqrt{t} Z)\Big|_{t=0} \leq 0.$$

Proof. By taking $Y = \sqrt{t} Z$ in inequality (1.22), one gets

$$\frac{1}{t}\left(\frac{1}{I(X + \sqrt{t} Z)} - \frac{1}{I(X)}\right) \geq \frac{1}{n},$$

and by tending t to 0, one gets

$$\frac{\mathrm{d}}{\mathrm{d}t}\left(\frac{1}{I(X + \sqrt{t} Z)}\right)\Big|_{t=0} \geq \frac{1}{n}.$$

In other words, one has

$$\frac{1}{n} I(X)^2 + \frac{\mathrm{d}}{\mathrm{d}t} I(X + \sqrt{t} Z)\Big|_{t=0} \leq 0.$$

□

1.7 Convex measures

The Brunn-Minkowski inequality (1.7) can be generalized by considering more general measure than the Lebesgue measure. In this view, Borell [15], [16] developed the theory of convex measures whose definition is based on the Brunn-Minkowski inequality (1.7). More precisely, Borell defined the notion of s-concave measure as a measure μ satisfying the following Brunn-Minkowski type inequality:

$$\mu((1-\lambda)A+\lambda B) \geq ((1-\lambda)\mu(A)^s+\lambda\mu(B)^s)^{\frac{1}{s}}\,, \tag{1.23}$$

for every compact subsets A, B of $\mathbb{R}^n$ such that $\mu(A)\mu(B) > 0$ and for every $\lambda \in [0,1]$. The Lebesgue measure is then seen as a $\frac{1}{n}$-concave measure. The parameter s belongs to $[-\infty;+\infty]$ and the limit cases are interpreted by continuity. Precisely, if $s=+\infty$ the right-hand side in (1.23) is $\max(\mu(A),\mu(B))$; if $s=0$ the right-hand side is $\mu(A)^{1-\lambda}\mu(B)^{\lambda}$ and corresponds to log-concave measures; if $s=-\infty$ the right-hand side is $\min(\mu(A),\mu(B))$. By inequality on geometric means, one has that a s-concave measure is r-concave for every $r \leq s$. Thus, every s-concave measure is $-\infty$-concave. The $-\infty$-concave measures are also called *convex measures*.

Borell characterized s-concave measures in term of a certain concavity property of its density.

Theorem 1.7.1 (Borell [16]). *Let μ be a measure in $\mathbb{R}^n$. Let H be the least affine subspace which contains the support of μ and set n_0 the dimension of H. Then, for $-\infty \leq s \leq \frac{1}{n_0}$, μ is s-concave if and only if μ admits a density f with respect to the Lebesgue measure on H, where f is γ-concave with $\gamma = s/(1-sn_0) \in [-\frac{1}{n_0},+\infty]$. Moreover, if $s>1$, then μ is s-concave if and only if μ is a Dirac measure.*

Theorem 1.7.1 permits to give more examples of s-concave measures. The case $s=0$ corresponds to the log-concave ones. The most famous example of a log-concave measure is the standard Gaussian measure

$$\mathrm{d}\gamma_n(x) = \frac{1}{(2\pi)^{\frac{n}{2}}}\mathrm{e}^{-\frac{|x|^2}{2}}\mathrm{d}x, \quad x \in \mathbb{R}^n$$

where $|\cdot|$ stands for the Euclidean norm. These measures have particular interests. For example, isoperimetric inequalities have been established for the Gaussian measure $\mathrm{d}\gamma_n$ by Borell in [17] and independently by Sudakov and Cirel'son in [82], which states that among sets of given Gauss measure, half-spaces minimize the Gauss surface area.

Thereafter, Kannan, Lovász and Simonovits in [57] formulated their famous conjecture: for the uniform measure on a convex body (which can be extended to arbitrary log-concave measures) half-spaces are *nearly* minimizers. In dimension 1, Bobkov (see [8] and reference therein) proved that among sets of given measure, half-lines minimize the surface area. More recently, a refined statement has been established by Cianchi *et al.* in [21]: in dimension n, a set of given Gauss measure and *almost* minimal Gauss surface area is necessarily *close* to be a half-space. This result has been extended by De Castro in [28] for all log-concave probability measures in dimension 1.

1.8 Publications

This thesis is articulated around the three following publications which are available on my personal web page or on the open archives HAL and arXiv.

1. *On the analogue of the concavity of entropy power in the Brunn-Minkowski theory*, with Matthieu Fradelizi.
   To appear in Advances in Applied Mathematics.
   Described in Chapter 2.

2. *Concavity properties of extensions of the parallel volume.*
   Submitted.
   Described in Chapter 3 and Chapter 4.

3. *On improvement of the concavity of convex measures.*
   Submitted.
   Described in Chapter 4.

Chapter 2

The analogue of the concavity of entropy power in the Brunn-Minkowski theory

In this chapter, I present my paper *On the analogue of the concavity of entropy power in the Brunn-Minkowski theory* [38], joint with Matthieu Fradelizi, to appear in Advances in Applied Mathematics. In this paper, we investigate a conjecture of Costa and Cover [25] and study its relationship with geometric inequalities such as the isoperimetric inequality or the Brunn-Minkowski inequality.

2.1 The conjecture of Costa-Cover

First, let us explain the origin of the conjecture of Costa-Cover. Costa and Cover noticed the similarity between the entropy power and the Brunn-Minkowski inequalities: for every independent random vectors X, Y in $\mathbb{R}^n$, with finite entropy and for every compact sets A and B in $\mathbb{R}^n$ one has

$$N(X+Y) \geq N(X) + N(Y) \quad \text{and} \quad |A+B|^{\frac{1}{n}} \geq |A|^{\frac{1}{n}} + |B|^{\frac{1}{n}},$$

where $|\cdot|$ denotes the n-dimensional Lebesgue measure and

$$N(X) = \frac{1}{2\pi \mathrm{e}} \mathrm{e}^{\frac{2}{n}H(X)}$$

denotes the entropy power of X. Recall that for X with density f the entropy of X is $H(X) = -\int f \ln f$ if the integral exists and $H(X) = -\infty$ otherwise. Applying the Brunn-Minkowski inequality to $B = \varepsilon B_2^n$ and letting ε tend to 0 one gets the classical isoperimetric inequality

$$\frac{|\partial A|}{|A|^{\frac{n-1}{n}}} \geq n|B_2^n|^{\frac{1}{n}} = \frac{|\partial B_2^n|}{|B_2^n|^{\frac{n-1}{n}}},$$

where the outer Minkowski surface area is defined by

$$|\partial A| = \lim_{\varepsilon \to 0^+} \frac{|A + \varepsilon B_2^n| - |A|}{\varepsilon},$$

whenever the limit exists. In the same way, Costa and Cover applied the entropy power inequality to $Y = \sqrt{\varepsilon} G$, where G is a standard Gaussian random vector (the $\sqrt{\varepsilon}$ comes from the homogeneity of entropy power $N(\sqrt{\varepsilon} X) = \varepsilon N(X)$). Then by letting ε tending to 0 and using de Bruijn's identity

$$\frac{\mathrm{d}}{\mathrm{d}t} H(X + \sqrt{t} G) = \frac{1}{2} I(X + \sqrt{t} G),$$

which states that the Fisher information (denoted by I) is the derivative of the entropy along the heat semi-group, they obtained the following *isoperimetric inequality for entropy*

$$N(X) I(X) \geq n.$$

Notice that this inequality is equivalent to the Log-Sobolev inequality for the Gaussian measure, see [2] chapter 9.

This analogy between the results of the Information theory and the Brunn-Minkowski theory was later extended and further explained and unified through Young's inequality by Dembo [29] and later on by Dembo, Cover and Thomas [30]. Each of these theories deal with a fundamental inequality, the Brunn-Minkowski inequality for the Brunn-Minkowski theory and the entropy power inequality for the Information theory. The objects of each theories are fellows, hence one can conjecture that properties of one theory fit into the other theory.

Thus, Costa and Cover [25], as an analogue of the concavity of entropy power with added Gaussian noise, which states that

$$t \mapsto N(X + \sqrt{t} G)$$

is a concave function (see [24] and [83]), formulated the following conjecture.

Conjecture 2.1.1 (Costa-Cover [25]). *Let A be a bounded measurable set in $\mathbb{R}^n$ then the function $t \mapsto |A + tB_2^n|^{\frac{1}{n}}$ is concave on $\mathbb{R}_+$.*

Notice that Guleryuz, Lutwak, Yang and Zhang [46] also pursued these analogies between the two theories and more recently, Bobkov and Madiman [13] established an analogue in Information theory of the Milman's reverse Brunn-Minkowski inequality.

2.2 Basic properties of the parallel volume and links with geometric inequalities

Notations

A set B is a *convex body* if B is a compact convex set of $\mathbb{R}^n$ with non-empty interior. If 0 is in the interior of B, then the gauge associated to B is the function $\|\cdot\|_B$ defined by $\|x\|_B = \inf\{t > 0 : x \in tB\}$, for every $x \in \mathbb{R}^n$. Let A be a bounded measurable subset of $\mathbb{R}^n$. For $x \in \mathbb{R}^n$, we set $d_B(x, A) = \inf\{\|x - y\|_B : y \in A\}$ and we simply denote $d(x, A) = d_{B_2^n}(x, A)$. We denote by $V_{A,B}$ the function defined for $t \geq 0$ by

$$V_{A,B}(t) = |A + tB|.$$

For $B = B_2^n$, we simply denote $V_A = V_{A,B_2^n}$ the *(outer) parallel volume function* of A defined on $\mathbb{R}_+$ by

$$V_A(t) = |A + tB_2^n|.$$

The outer Minkowski surface area $|\partial A|$ of A may be defined using V_A: if the function V_A admits a right derivative at 0 then one has

$$(V_A)'_+(0) = \lim_{t \to 0^+} \frac{|A + tB_2^n| - |A|}{t} = |\partial A|.$$

Connectedness properties of the parallel set

Let A be a bounded measurable subset of $\mathbb{R}^n$ and B be a convex body in $\mathbb{R}^n$, then for every $t > 0$ the set $A + tB$ has a finite number of connected components and this number is non-increasing as a function of t.

Indeed, let $t > 0$ and C be a connected component of $A + tB$. Let $x \in C$, then there exists $a \in A$ such that $x \in a + tB$. Moreover $a + tB$ is connected, hence $a + tB \subset C$

since C is the connected component of x. Thus $|C| \geq |tB| > 0$. Since $|A + tB|$ is finite and equal to the volume of the disjoint union of its connected components, there is a finite number of them.

Let $0 < t_0 \leq t_1$. Denote by $C_1, \ldots, C_N$ the connected components of $A + t_0 B$. One has $A + t_1 B = \cup_{i=1}^N (C_i + (t_1 - t_0)B)$ and since $C_i + (t_1 - t_0)B$ is connected, it follows that the number of connected components of $A + t_1 B$ is at most N.

Regularity properties of the parallel volume

Let A be a compact subset of $\mathbb{R}^n$ and B be a convex body in $\mathbb{R}^n$ containing 0 in its interior. The function $d_B(\cdot, A)$ is Lipschitz, hence from Federer's co-area formula [32], one has

$$V_{A,B}(t) = |A + tB| = |A| + \int_0^t \mathcal{H}^{n-1}(\{x : d_B(x, A) = s\})\mathrm{d}s, \tag{2.1}$$

where $\mathcal{H}^{n-1}$ denotes the $(n-1)$-dimensional Hausdorff measure. Therefore the function $V_{A,B}$ is absolutely continuous on $\mathbb{R}_+$.

Notice that for every bounded measurable subset A of $\mathbb{R}^n$ and every $0 < s < t$, one has

$$\overline{A} + sB \subset A + tB \subset \overline{A} + tB.$$

From the continuity of $V_{\overline{A},B}$, one gets that $|A + tB| = |\overline{A} + tB|$ for $t > 0$. Hence we may assume in the following that A is compact.

Stachó [79] proved a better regularity for $V_{A,B}$, he proved namely that the function $V_{A,B}$ is a n-Kneser function, which means that for every $0 < t_0 \leq t_1$ and every $\lambda \geq 1$, one has

$$V_{A,B}(\lambda t_1) - V_{A,B}(\lambda t_0) \leq \lambda^n (V_{A,B}(t_1) - V_{A,B}(t_0)). \tag{2.2}$$

Stachó deduced that for every $0 < t_0 < t_1$, the function

$$t \mapsto V_{A,B}(t) - t^n \frac{V_{A,B}(t_1) - V_{A,B}(t_0)}{t_1^n - t_0^n}$$

is concave on $[t_1, +\infty)$. Thus $V_{A,B}$ admits right and left derivatives at every $t > 0$, which satisfy

$$(V_{A,B})'_+(t) \leq (V_{A,B})'_-(t) \tag{2.3}$$

and these two derivatives coincide for all $t > 0$ outside a countable set. Hence the outer Minkowski surface area of $A + tB_2^n$ exists for every $t > 0$ and one has

$$|\partial(A + tB_2^n)| = \lim_{\varepsilon \to 0^+} \frac{|A + tB_2^n + \varepsilon B_2^n| - |A + tB_2^n|}{\varepsilon} = (V_A)'_+(t). \tag{2.4}$$

In Proposition 2.3.8 below, we show that the function V_A is continuously differentiable on $[\mathrm{diam}(A), +\infty)$. If A is convex or with sufficiently regular boundary then the equality (2.4) also holds for $t = 0$. For precise statements and comparisons between the outer Minkowski surface area and other measurements of $\partial(A + tB_2^n)$, like the Hausdorff measure, see [1].

Proposition 2.2.1. *Let A and B be compact subsets of $\mathbb{R}^n$ with B convex, then the function $(s,t) \mapsto |sA + tB|$ is continuous on $\mathbb{R}_+ \times \mathbb{R}_+$. Moreover the functions*

$$t \mapsto |A + tB| - t^n|B| \quad \textit{and} \quad s \mapsto |sA + B| - s^n|A|$$

are non-decreasing. In particular, the function $(s,t) \mapsto |sA + tB|$ is non-decreasing in each coordinate.

Proof. Let us prove the continuity. Let $0 \le t \le t'$. Let $r > 0$ be such that $A \subset rB_2^n$ and $B \subset rB_2^n$. Then we have

$$|A + tB| \le |A + t'B| \le |A + tB + r(t' - t)B_2^n|.$$

From (2.1) the function $t' \mapsto |A + tB + t'rB_2^n|$ is continuous at 0, thus the function $t \mapsto |A + tB|$ is continuous on $\mathbb{R}_+$. Since for $s > 0$ and $t \ge 0$

$$|sA + tB| = s^n \left| A + \frac{t}{s} B \right|$$

then $(s,t) \mapsto |sA + tB|$ is continuous on $\mathbb{R}_+^* \times \mathbb{R}_+$. We also have for every $s \ge 0$ and $t \ge 0$

$$|tB| \le |sA + tB| \le |srB_2^n + tB|$$

so $(s,t) \mapsto |sA + tB|$ is continuous on $\{0\} \times \mathbb{R}_+$. It follows that the function $(s,t) \mapsto |sA + tB|$ is continuous on $\mathbb{R}_+ \times \mathbb{R}_+$.

The monotonicity follows from (2.2). Indeed, The inequality (2.2) may be written in

a different way, as follows

$$|A + \lambda t_1 B| - |A + \lambda t_0 B| \leq |\lambda A + \lambda t_1 B| - |\lambda A + \lambda t_0 B|.$$

Changing variables, it also means that for every $0 < s_0 \leq s_1$ and $0 < t_0 \leq t_1$

$$|s_0 A + t_1 B| - |s_0 A + t_0 B| \leq |s_1 A + t_1 B| - |s_1 A + t_0 B|.$$

Applied first to $s_1 = 1$ and $s_0 \to 0$, and then to $t_1 = 1$ and $t_0 \to 0$, we deduce that the functions

$$t \mapsto V_{A,B}(t) - t^n |B| \quad \text{and} \quad s \mapsto |sA + B| - s^n |A|$$

are non-decreasing. In particular, the function $(s,t) \mapsto |sA + tB|$ is non-decreasing in each coordinate. □

Remark. If A and B are arbitrary compact sets, it is not necessarily true that the function $V_{A,B}$ is non-decreasing as can be seen from the example of $A = \{0; 4\}$ and $B = [-5, -3] \cup [3, 5]$.

Links with geometric inequalities

Let us connect the Costa-Cover conjecture with the Brunn-Minkowski inequality and the isoperimetric inequality. We first establish that the conjecture of Costa-Cover has many equivalent reformulations.

Proposition 2.2.2. *Let A and B be compact sets in $\mathbb{R}^n$, with B convex. The following properties are equivalent.*
(i) $t \mapsto |A + tB|^{\frac{1}{n}}$ is concave on $\mathbb{R}_+$.
(ii) $s \mapsto |sA + B|^{\frac{1}{n}}$ is concave on $\mathbb{R}_+$.
(iii) $\lambda \mapsto |(1-\lambda)A + \lambda B|^{\frac{1}{n}}$ is concave on $[0, 1]$.
(iv) $(s,t) \mapsto |sA + tB|^{\frac{1}{n}}$ is concave on $\mathbb{R}_+ \times \mathbb{R}_+$.

Proof. (iv)$\Longrightarrow$(i), (iv)$\Longrightarrow$(ii) and (iv)$\Longrightarrow$(iii) are clear. Let us prove that (i)$\Longrightarrow$(iv), a similar argument easily shows that (ii)$\Longrightarrow$(iv) and (iii)$\Longrightarrow$(iv). Let $f : \mathbb{R}_+ \to \mathbb{R}$ and $g : \mathbb{R}_+ \times \mathbb{R}_+ \to \mathbb{R}$ be defined by $f(t) = |A + tB|^{\frac{1}{n}}$ and $g(s,t) = |sA + tB|^{\frac{1}{n}}$, for every

$s, t \in \mathbb{R}_+$. For every $t \geq 0$ and $s > 0$, we have, from the homogeneity of the volume

$$g(s,t) = sf\left(\frac{t}{s}\right).$$

Thus for every $\lambda \in [0,1]$, $s_1, s_2 \in (0,+\infty)$ and $t_1, t_2 \in \mathbb{R}_+$ we get

$$g((1-\lambda)s_1 + \lambda s_2, (1-\lambda)t_1 + \lambda t_2)) = ((1-\lambda)s_1 + \lambda s_2) f\left(\frac{(1-\lambda)t_1 + \lambda t_2}{(1-\lambda)s_1 + \lambda s_2}\right).$$

Using the concavity of f, we deduce that

$$\begin{aligned} f\left(\frac{(1-\lambda)t_1 + \lambda t_2}{(1-\lambda)s_1 + \lambda s_2}\right) &= f\left(\frac{(1-\lambda)s_1\frac{t_1}{s_1} + \lambda s_2 \frac{t_2}{s_2}}{(1-\lambda)s_1 + \lambda s_2}\right) \\ &\geq \frac{(1-\lambda)s_1 f\left(\frac{t_1}{s_1}\right) + \lambda s_2 f\left(\frac{t_2}{s_2}\right)}{(1-\lambda)s_1 + \lambda s_2} \\ &= \frac{(1-\lambda)g(s_1,t_1) + \lambda g(s_2,t_2)}{(1-\lambda)s_1 + \lambda s_2}. \end{aligned}$$

We deduce that g is concave on $(\mathbb{R}_+^*)^2$. Moreover, g is continuous on $(\mathbb{R}_+)^2$ by Proposition 2.2.1. Hence g is concave on $(\mathbb{R}_+)^2$. □

Remark. Notice that if for two fixed compact sets A and B, with B convex, the assertion (iii) of Proposition 2.2.2 holds true then for every $\lambda \in [0,1]$,

$$|(1-\lambda)A + \lambda B|^{\frac{1}{n}} \geq (1-\lambda)|A|^{\frac{1}{n}} + \lambda |B|^{\frac{1}{n}},$$

which is the Brunn-Minkowski inequality. Hence the conjecture of Costa-Cover ((i) of Proposition 2.2.2) implies the Brunn-Minkowski inequality in the case where one set is convex.

Notice also that the conjecture of Costa-Cover provides a refinement of the Brunn-Minkowski inequality for parallel sets of a fixed compact set A since it then follows that for every $\lambda \in [0,1]$ and every $t_1, t_2 \in \mathbb{R}_+$,

$$\begin{aligned} |(1-\lambda)(A + t_1 B) + \lambda(A + t_2 B)|^{\frac{1}{n}} &\geq |A + ((1-\lambda)t_1 + \lambda t_2)B|^{\frac{1}{n}} \\ &\geq (1-\lambda)|A + t_1 B|^{\frac{1}{n}} + \lambda |A + t_2 B|^{\frac{1}{n}}. \end{aligned}$$

Let us study the connection with the isoperimetric inequality. The Costa-Cover

conjecture implies that for every $t \geq 0$ and every sufficiently regular compact set A

$$\frac{1}{n}\frac{|\partial A|_{n-1}}{|A|^{1-\frac{1}{n}}} = (V_A^{1/n})'_+(0) \geq (V_A^{1/n})'_+(t) \geq \lim_{t\to+\infty}(V_A^{1/n})'_+(t) = \frac{1}{n}\frac{|\partial B_2^n|_{n-1}}{|B_2^n|^{1-\frac{1}{n}}},$$

which is the isoperimetric inequality. This would give a non-increasing path from $\frac{|\partial A|_{n-1}}{|A|^{1-\frac{1}{n}}}$ to $\frac{|\partial B_2^n|_{n-1}}{|B_2^n|^{1-\frac{1}{n}}}$ through the family

$$\left(\frac{|\partial(A+tB_2^n)|_{n-1}}{|A+tB_2^n|^{1-\frac{1}{n}}}\right)_{t\in\mathbb{R}_+}.$$

We may apply the same arguments for arbitrary convex body B instead of B_2^n. Thus, the conjecture that $t \mapsto V_{A,B}(t)^{1/n}$ is concave on $\mathbb{R}_+$ implies the following generalized isoperimetric inequality, also known as Minkowski's first inequality proved for example in [77],

$$\frac{|\partial_B A|_{n-1}}{|A|^{1-\frac{1}{n}}} \geq \frac{|\partial_B B|_{n-1}}{|B|^{1-\frac{1}{n}}} = n|B|^{\frac{1}{n}}.$$

Recall that for $t \geq 0$, $V_A(t) = |A+tB_2^n|$ and that Costa and Cover [25] conjectured the $\frac{1}{n}$-concavity of V_A on $\mathbb{R}_+$, for every compact A. They also noticed that their conjecture holds true for A being convex. Let us repeat their argument. For every $\lambda \in [0,1]$ and t, $s \in \mathbb{R}_+$, from the Brunn-Minkowski inequality, one obtains

$$\begin{aligned} |A+((1-\lambda)t+\lambda s)B_2^n|^{\frac{1}{n}} &= |(1-\lambda)(A+tB_2^n)+\lambda(A+sB_2^n)|^{\frac{1}{n}} \\ &\geq (1-\lambda)|A+tB_2^n|^{\frac{1}{n}}+\lambda|A+sB_2^n|^{\frac{1}{n}}. \end{aligned}$$

Notice that from the same argument we deduce that for every convex sets A and B, the function $V_{A,B}(t) = |A+tB|$ is $\frac{1}{n}$-concave on $\mathbb{R}_+$. Hence for convex sets A and B, the properties (i)-(iv) of Proposition 2.2.2 holds true. In this case, the $\frac{1}{n}$-concavity of $V_{A,B}$ on $\mathbb{R}_+$ is equivalent to the Brunn-Minkowski inequality (and true).

2.3 The $\frac{1}{n}$-concavity of the parallel volume

In dimension 1

Let us prove the Costa-Cover conjecture in dimension 1.

Proposition 2.3.1. *Let A be a compact set in $\mathbb{R}$ and B be a convex body in $\mathbb{R}$, then $t \mapsto V_{A,B}(t) = |A + tB|$ is concave on $\mathbb{R}_+$.*

Proof. We note that in dimension 1, for $t_0 > 0$, $A + t_0 B$ is a disjoint finite union of intervals. Thus, by setting $A + t_0 B$ for an arbitrary $t_0 > 0$ instead of A, we can assume that $A = \cup_{i=1}^N [a_i, b_i]$, with $a_i, b_i \in \mathbb{R}$, $N \in \mathbb{N}^*$. Thus, for t sufficiently small,

$$V_{A,B}(t) = |A + tB| = \sum_{i=1}^N (b_i - a_i + |B|t) = \sum_{i=1}^N (b_i - a_i) + |B|Nt.$$

Thus $V_{A,B}$ is piecewise affine on $\mathbb{R}_+^*$. Moreover, when t increases, the slope of $V_{A,B}$ is non-increasing since the number of intervals composing $A + tB$ is non-increasing. Using that $V_{A,B}$ is continuous on $\mathbb{R}_+$, we conclude that it is concave on $\mathbb{R}_+$. □

Remark. For arbitrary compact sets A and B, the function $V_{A,B}$ is not necessarily concave as can be seen from the example of $A = \{0; 4\}$ and $B = [-5, -3] \cup [3, 5]$, the same example which was given in the remark after Proposition 2.2.1 to show that the function $V_{A,B}$ is not necessarily increasing.

In dimension 2

We first prove the Costa-Cover conjecture for compact connected sets in dimension 2.

Theorem 2.3.2. *Let A be a compact connected subset of $\mathbb{R}^2$. Then, $V_A : t \mapsto |A + tB_2^2|$ is $\frac{1}{2}$-concave on $\mathbb{R}_+$.*

Proof. We proceed by approximating A by finite sets, hence let us first assume that A is finite, $A = \{x_1, \dots, x_N\}$. Let $T = \{t_1, \dots, t_m\} \subset \mathbb{R}_+$, with $t_1 < \cdots < t_m$, be the finite set of real numbers which are equal to $\frac{|x_i - x_j|}{2}$ for some $i, j \in \{1, \dots, N\}$ or to the radius of the circumscribed circle of a triangle (x_i, x_j, x_k) for some $i, j, k \in \{1, \dots, N\}$. For $t > 0$, let $p_A(t)$ be the number of connected components of $A + tB_2^2$ and $q_A(t)$ be the genus of $A + tB_2^2$. Notice that the functions p_A and q_A are piecewise constants on $\mathbb{R}_+ \setminus T$ and that V_A is infinitely differentiable on $\mathbb{R}_+ \setminus T$, (see proposition 4.8 in [43]).

We use a key result established by Fiala in the context of Riemannian manifolds, see [33], first part, section 9 *vraies parallèles* (see Remark ($\star$) below to get an intuition of this result): for every $t \in (0; +\infty) \setminus \{t_1, \dots, t_m\}$,

$$V_A''(t) \leq 2\pi(p_A(t) - q_A(t)).$$

Notice that $p_A(t) - q_A(t)$ is equal to the Euler-Poincaré characteristic of $A + tB_2^2$.

Now, we consider $t_0 \in \mathbb{R}_+$ such that $A + t_0 B_2^2$ is connected. Then for every $t \geq t_0$, $A + tB_2^2$ is connected. Hence for every $t \in (t_0; +\infty) \setminus \{t_1, \dots, t_m\}$,

$$V_A''(t) \leq 2\pi. \tag{2.5}$$

Let us prove that V_A is $\frac{1}{2}$-concave on $(t_0, +\infty)$. By the isoperimetric inequality, we have for every $t \in (t_0; +\infty) \setminus \{t_1, \dots, t_m\}$,

$$4\pi |A + tB_2^2| \leq |\partial(A + tB_2^2)|^2,$$

we write this in this form

$$4\pi V_A(t) \leq V_A'(t)^2,$$

thus, using (2.5),

$$2V_A(t)V_A''(t) \leq V_A'(t)^2.$$

Hence $\left(\sqrt{V_A}\right)''(t) \leq 0$. We conclude that V_A is $\frac{1}{2}$-concave on (t_i, t_{i+1}), for all $i \leq m-1$ and on $(t_m, +\infty)$. From (2.3) we have $(V_A)'_-(t_i) \geq (V_A)'_+(t_i)$, thus V_A is $\frac{1}{2}$-concave on $(t_0, +\infty)$.

Let us then consider a compact connected set A of $\mathbb{R}^2$. Let $t_0 > 0$. Let $(x_N)_{N \in \mathbb{N}^*}$ be a dense sequence in A. We denote, for $N \in \mathbb{N}^*$, $A_N = \{x_1, \dots, x_N\}$. There exists $N_0 \in \mathbb{N}^*$ such that for every $N \geq N_0$, $A_N + t_0 B_2^2$ is connected. For every $N \geq N_0$, we have shown that V_{A_N} is $\frac{1}{2}$-concave on $(t_0; +\infty)$. Moreover the sequence $(A_N)_N \to A$ in the Hausdorff distance, thus by denoting $d_N = d_H(A_N, A)$, the Hausdorff distance, one has, for every $t > 0$

$$A_N + tB_2^2 \subset A + tB_2^2 \subset A_N + (t + d_N)B_2^2.$$

Applying the right-hand side inclusion to t replaced by $t - d_N$ where N satisfies $d_N < t$, we deduce

$$A + (t - d_N)B_2^2 \subset A_N + tB_2^2 \subset A + tB_2^2.$$

Hence by continuity of the function V_A at the point t,

$$\lim_{N \to +\infty} V_{A_N}(t) = V_A(t).$$

It follows that $\sqrt{V_A}$ is the pointwise limit of a sequence of concave functions, hence V_A is

$\frac{1}{2}$-concave on $(t_0; +\infty)$, for every $t_0 > 0$. We conclude that V_A is $\frac{1}{2}$-concave on $\mathbb{R}_+$. $\square$

Remark $(\star)$**.** The Dirichlet cells with respect to A (see Figure 2.1 below) are defined for $i \in \{1, \cdots, N\}$ by

$$D_i = \{x \in \mathbb{R}^2; |x - x_i| \leq |x - x_j|, \forall j \in \{1, \ldots, N\}\}.$$

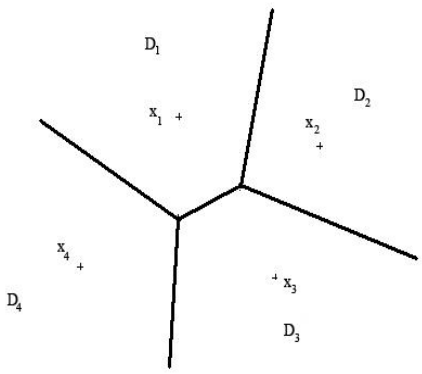

Figure 2.1: Dirichlet cells

For $i \in \{1, \ldots, N\}$ and $t \geq 0$, let $V_A^i(t) = |(A + tB_2^2) \cap D_i|$. Notice that

$$V_A(t) = \sum_{i=1}^{N} V_A^i(t).$$

Let $i \in \{1, \ldots, N\}$. We compute $(V_A^i)''(t)$ in the case where D_i is not bounded and $\partial(x_i + tB_2^2) \cap \partial D_i$ is a set of exactly four points u_1, u_2, u_3, u_4. It will be not hard to deduce $(V_A^i)''(t)$ in the other cases. Say for example that the arc $\widehat{u_1 u_2} \subset D_i$ and the arc $\widehat{u_3 u_4} \subset D_i$. Since D_i is a polyhedron, the points u_1, u_2, u_3, u_4 belong to at most four edges, denoted by L_1, L_2, L_3, L_4. We denote by θ_i the angle $\angle(\mathrm{Aff}(L_1), \mathrm{Aff}(L_2))$, by ν_i the angle $\angle(\mathrm{Aff}(L_3), \mathrm{Aff}(L_4))$, by $\delta_i(t)$ the angle $\angle(u_1, x_i, u_2)$, by $\xi_i(t)$ the angle $\angle(u_3, x_i, u_4)$. The case $L_1 = L_2$ correspond to $\theta_i = \pi$ and the case L_1 parallel to L_2 correspond to $\theta_i = 0$, and similarly for ν_i. We denote $a_i = d(x_i, L_1)$ and $b_i = d(x_i, L_2)$. We define the angles $\alpha_i(t)$ and $\beta_i(t)$ such that

$$\sin(\alpha_i(t)) = \frac{a_i}{t} \quad \text{and} \quad \sin(\beta_i(t)) = \frac{b_i}{t}.$$

Say for example that $\delta_i(t) = \theta_i + \alpha_i(t) + \beta_i(t)$. See Figure 2.2 below:

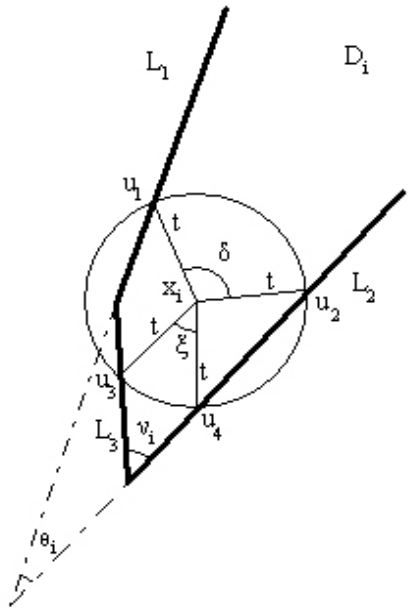

Figure 2.2: Inside a Dirichlet cell

Notice that

$$(V_A^i)'(t) = t\delta_i(t) + t\xi_i(t).$$

We get

$$(t\delta_i(t))' = \theta_i + \alpha_i(t) - \tan(\alpha_i(t)) + \beta_i(t) - \tan(\beta_i(t)) \leq \theta_i.$$

With a similar computation, we also get

$$(t\xi_i(t))' \leq -\nu_i.$$

we conclude that

$$(V_A^i)''(t) \leq \theta_i - \nu_i.$$

Pursuing these computations and adding the obtained inequality, we get

$$V_A''(t) = \sum_{i=1}^{N} (V_A^i)''(t) \leq 2\pi(p_A(t) - q_A(t)).$$

Remarks.

1. In the proof of Theorem 2.3.2, from the bound $V_A''(t) \leq 2\pi(p_A(t) - q_A(t))$ obtained for every finite set A and for every $t > 0$ outside a finite number of points, one deduces that for every compact subset A of $\mathbb{R}^2$ with finite connected components p_A, the function $t \mapsto V_A(t) - p_A \pi t^2$ is concave on $(0; +\infty)$. From Steiner's formula one has
$$V_{\mathrm{conv}(A)}(t) = |\mathrm{conv}(A)| + t|\partial(\mathrm{conv}(A))| + \pi t^2.$$
If A is connected, it follows that
$$V_{\mathrm{conv}(A)}(t) - V_A(t) = |\mathrm{conv}(A)| + t|\partial(\mathrm{conv}(A))| + \pi t^2 - V_A(t)$$
is convex as the sum of an affine function and a convex function. Notice that this complements the result of Kampf [54] who proved that $V_{\mathrm{conv}(A)}(t) - V_A(t)$ tends to 0 as $t \to +\infty$.

2. If in Theorem 2.3.2 we replace B_2^2 by an ellipsoid, *i.e.* by $T(B_2^2)$ where T is an invertible linear transformation, then the result holds since
$$|A + tT(B_2^2)| = |T(T^{-1}(A) + tB_2^2)| = |\det(T)||T^{-1}(A) + tB_2^2|.$$

For a non-connected set A, the next proposition shows that the function V_A is not necessarily $\frac{1}{n}$-concave on $\mathbb{R}_+$ in dimension $n \geq 2$.

Proposition 2.3.3. *Let $n \geq 2$. We set $A = B_2^n \cup \{2e_1\}$ (see Figure (2.3) below). The function $V_A(t) = |A + tB_2^n|$ is not $\frac{1}{n}$-concave on $\mathbb{R}_+$.*

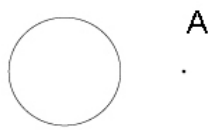

Figure 2.3: Counterexample

Proof. For every $t \in [0, \frac{1}{2})$, we have
$$|A + tB_2^n| = |(B_2^n \cup \{2e_1\}) + tB_2^n| = |B_2^n + tB_2^n| + |tB_2^n| = |B_2^n|((1+t)^n + t^n).$$
Since the $\frac{1}{n}$-power of this function is not concave (it is strictly convex), V_A is not $\frac{1}{n}$-concave on $\mathbb{R}_+$ for $n \geq 2$. $\square$

Remark. This counterexample shows that the Brunn-Minkowski inequality doesn't imply the $\frac{1}{n}$-concavity of the parallel volume for non convex sets.

Remark. The concavity of entropy power in Information theory and the $\frac{1}{n}$-concavity of the parallel volume in the Brunn-Minkowski theory can be seen as the concavity of the same underlying quantity in Information theory, namely the p-th Rényi entropy power, respectively for $p = 1$ and for $p = 0$. A concavity property for the p-th Rényi entropy power has been shown by Savaré and Toscani in [75] for $p > 1 - \frac{2}{n}$, where n is the dimension and Proposition 2.3.3 shows that it does not hold for $p = 0$.

In dimension $n \geq 3$

We may ask if the Costa-Cover conjecture still holds for connected sets in dimension $n \geq 3$. The next proposition shows that this is false: even for star-shaped body, the function V_A is not necessarily $\frac{1}{n}$-concave on $\mathbb{R}_+$.

Proposition 2.3.4. *Let $n \geq 3$. We set $A = ([-1,1]^3 \cup [e_1, le_1]) \times [-1,1]^{n-3}$, where $l \geq n^4$ (see Figure (2.4) below). The function $V_A(t) = |A + tB_2^n|$ is not $\frac{1}{n}$-concave on $\mathbb{R}_+$.*

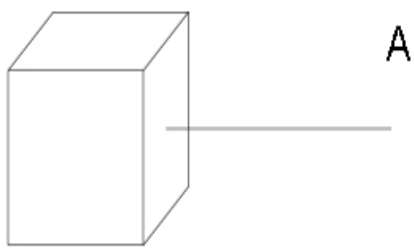

Figure 2.4: Counterexample

Proof. Define $C = \{0\}^3 \times [-1,1]^{n-3}$. For $t \in [0,1]$, we have

$$\begin{aligned} |A + tB_2^n| &= |[-1,1]^n + tB_2^n| + |[(1+t)e_1, le_1] + C + tB_2^n \cap e_1^\perp| \\ &\quad + |\{le_1\} + C + t(B_2^n)^+| \end{aligned}$$

where

$$(B_2^n)^+ = \{x \in B_2^n : x_1 \geq 0\}.$$

We use Steiner's formula for each term. One has

$$|[-1,1]^n + tB_2^n| = \sum_{k=0}^{n} \binom{n}{k} t^k 2^{n-k} |B_2^k|_k.$$

For the second term, we first notice that

$$|[(1+t)e_1, le_1] + C + tB_2^n \cap e_1^\perp|_n = (l-1-t)|C + tB_2^n \cap e_1^\perp|_{n-1}.$$

Using for example [77] p. 294 formula (5.3.23), we get that the coefficient of t^2 in the Steiner expansion of $|C + tB_2^n \cap e_1^\perp|_{n-1}$ is equal to $\pi 2^{n-3}$. The third term is equal to t^3 times a polynomial. Thus, there are coefficients $a_0, \dots, a_n$ such that for $t \in [0,1]$,

$$V_A(t) = a_0 + a_1 t + \cdots + a_n t^n,$$

with $a_0 = 2^n$, $a_1 = n2^n$ and $a_2 = 2^{n-3}\pi\left(n(n-1) + l - 1\right)$. Since $l \geq 2n^2$, it follows directly that

$$\frac{n}{n-1} V_A(0) V_A''(0) - V_A'(0)^2 > 0.$$

Hence $(V_A^{1/n})''(0) > 0$, thus $V_A^{1/n}$ is not concave in a neighborhood of 0. □

We have seen that the Costa-Cover conjecture does not hold in general. We still conjecture that the following weaker form may hold.

Conjecture 2.3.5. *Let A be a compact subset of $\mathbb{R}^n$ and B be a convex body in $\mathbb{R}^n$. Then there exists t_0 such that the function $V_{A,B}(t) = |A + tB|$ is $\frac{1}{n}$-concave on $[t_0, +\infty)$.*

We have shown that this conjecture is true in dimension 1 and in dimension 2 for $B = B_2^2$. Indeed, in dimension 2, we have seen that it is true for every compact connected set. Since for every compact subset A of $\mathbb{R}^2$ the set $A + tB_2^2$ is connected for $t \geq \frac{1}{2}\mathrm{diam}(A)$, it follows that $t \mapsto |A + tB_2^2|$ is $\frac{1}{2}$-concave on $[\frac{1}{2}\mathrm{diam}(A), +\infty)$.

We prove the Conjecture 2.3.5 in some particular cases in dimension $n \geq 3$.

Proposition 2.3.6. *Let A be a compact subset of $\mathbb{R}^n$. Then the function $t \mapsto |A + t\mathrm{conv}(A)|^{1/n}$ is affine on $[n; +\infty)$. If moreover $\partial\mathrm{conv}(A) \subset A$ then $t \mapsto |A + t\mathrm{conv}(A)|^{1/n}$ is affine on $[1; +\infty)$.*

Proof. It was noticed by Schneider [76] that for every $t \geq n$,

$$A + t\mathrm{conv}(A) = (1+t)\mathrm{conv}(A).$$

We conclude that $t \mapsto |A + t\mathrm{conv}(A)|^{\frac{1}{n}}$ is affine on $[n; +\infty)$.

If moreover $\partial\mathrm{conv}(A) \subset A$ then for every $x \in \mathrm{conv}(A)$ there exists two points y, z in $\partial\mathrm{conv}(A)$ such that $x \in [y, z]$. Say, for example, that $|x - y| \leq |x - z|$ then $u = 2x - y \in [y, z] \subset \mathrm{conv}(A)$. Hence

$$x = \frac{y+u}{2} \in \frac{\partial\mathrm{conv}(A) + \mathrm{conv}(A)}{2}.$$

Finally

$$\mathrm{conv}(A) \subset \frac{\partial\mathrm{conv}(A) + \mathrm{conv}(A)}{2} \subset \frac{A + \mathrm{conv}(A)}{2} \subset \mathrm{conv}(A).$$

We deduce that $A + t\mathrm{conv}(A) = (1+t)\mathrm{conv}(A)$, for every $t \geq 1$. We conclude that $t \mapsto |A + t\mathrm{conv}(A)|^{\frac{1}{n}}$ is affine on $[1; +\infty)$. □

Remark. More generally, Schneider introduced in [76] the quantity

$$c(A) = \inf\{t \geq 0; A + t\mathrm{conv}(A) = (1+t)\mathrm{conv}(A)\}.$$

Clearly $t \mapsto |A + t\mathrm{conv}(A)|^{\frac{1}{n}}$ is affine on $[c(A); +\infty)$. The above proposition establishes that $c(A) \leq n$ in general and $c(A) \leq 1$ if $\partial\mathrm{conv}(A) \subset A$. Notice that if $A \subset \mathbb{R}^n$ is connected then $c(A) \leq n - 1$, see [76].

Theorem 2.3.7. *Let A be a compact set in $\mathbb{R}^n$. If the function $\varepsilon \mapsto |\varepsilon A + B_2^n|$ is twice differentiable in a neighbourhood of 0, with second derivative continuous at 0, then there exists $t_0 \geq 0$ such that the function $V_A(t) = |A + tB_2^n|$ is $\frac{1}{n}$-concave for $t \geq t_0$. In particular this holds for A being finite.*

Proof. Kampf proved in [55], Lemma 28, that for every compact set A there exists a constant C which depends on n, A so that for every $t \geq 1$,

$$0 \leq |\mathrm{conv}(A) + tB_2^n| - |A + tB_2^n| \leq Ct^{n-3}.$$

Then, setting $\varepsilon = \frac{1}{t}$, for every $\varepsilon \in (0, 1]$, one deduces

$$0 \leq |\varepsilon\mathrm{conv}(A) + B_2^n| - |\varepsilon A + B_2^n| \leq C\varepsilon^3. \tag{2.6}$$

We denote $g_{\mathrm{conv}(A)}(\varepsilon) = |\varepsilon \mathrm{conv}(A) + B_2^n|$ and $g_A(\varepsilon) = |\varepsilon A + B_2^n|$, since g_A is twice differentiable at 0 it follows that

$$g_A(0) = g_{\mathrm{conv}(A)}(0)\,;\; g_A'(0) = g_{\mathrm{conv}(A)}'(0)\,;\; g_A''(0) = g_{\mathrm{conv}(A)}''(0).$$

From Steiner's formula, we get $g_{\mathrm{conv}(A)}(0) = |B_2^n|$ and

$$\begin{aligned} g_{\mathrm{conv}(A)}'(0) &= nV(\mathrm{conv}(A), B_2^n[n-1]), \\ g_{\mathrm{conv}(A)}''(0) &= n(n-1)V(\mathrm{conv}(A)[2], B_2^n[n-2]). \end{aligned}$$

If $\mathrm{conv}(A)$ is not homothetic to B_2^n, then from the equality case of the Alexandrov-Fenchel inequality, see [77], Theorem 6.6.8, page 359, we get

$$|B_2^n| V(\mathrm{conv}(A)[2], B_2^n[n-2]) < V(\mathrm{conv}(A), B_2^n[n-1])^2,$$

that is

$$\frac{n}{n-1} g_{\mathrm{conv}(A)}(0) g_{\mathrm{conv}(A)}''(0) < g_{\mathrm{conv}(A)}'(0)^2.$$

Thus we deduce that

$$\frac{n}{n-1} g_A(0) g_A''(0) < g_A'(0)^2.$$

Since g_A, g_A' and g_A'' are continuous at 0, there exists $\varepsilon_0 > 0$ such that for every $\varepsilon \in [0, \varepsilon_0]$,

$$\frac{n}{n-1} g_A(\varepsilon) g_A''(\varepsilon) \leq g_A'(\varepsilon)^2.$$

Hence the function g_A is $\frac{1}{n}$-concave on $[0, \varepsilon_0]$. We conclude by Proposition 2.2.2, setting $t_0 = \frac{1}{\varepsilon_0}$, that $t \mapsto |A + tB_2^n|$ is $\frac{1}{n}$-concave on $[t_0, +\infty)$. If $\mathrm{conv}(A)$ is homothetic to B_2^n then the result follows from Proposition 2.3.6.

If A is finite then the function $\varepsilon \mapsto |\varepsilon A + B_2^n|$ is analytic in a neighbourhood of 0, see [43].

□

Remarks.

1. The preceding theorem is still valid if one replaces B_2^n by a convex body $B = rB_2^n + M$, for some $r > 0$ and some convex body M such that its support function $h_B(u) = \max\{< x, u >, x \in B\}$ is twice differentiable on $\mathbb{R}^n \setminus \{0\}$ because inequality (2.6) holds with these assumptions (see [55]).

2. The function $\varepsilon \mapsto |\varepsilon A + B_2^n|$ is not necessarily twice differentiable in a neighbourhood of 0 as can be seen from the following example. In dimension 2, we consider the points $I = (1,1)$, $J = (1,0)$ and $A = I \cup J \cup \{(\cos(1/k), \sin(1/k)), k \geq 1\}$. Then, A is compact but for every $t_0 \in \mathbb{R}_+$, the function $V_A(t) = |A + tB_2^2|$ is not twice differentiable on $(t_0, +\infty)$.

In fact, one can show that the function $V_A(t) = |A+tB_2^n|$ is continuously differentiable on $[\mathrm{diam}(A); +\infty)$.

Proposition 2.3.8. *Let A be a compact subset of $\mathbb{R}^n$. Then the function $V_A(t) = |A+tB_2^n|$ is continuously differentiable on $[\mathrm{diam}(A); +\infty)$, the function $g_A(\varepsilon) = |\varepsilon A+B_2^n|$ is continuously differentiable on $(0, \mathrm{diam}(A)^{-1})]$ and differentiable at 0 with $g'_A(0) = nV(\mathrm{conv}(A), B_2^n[n-1])$.*

Proof. Rataj et al. in [72], Theorem 3.3, showed that $V'_A(t)$ exists for every $t \geq \mathrm{diam}(A)$, thus we have for every $t \geq \mathrm{diam}(A)$

$$V'_A(t) = |\partial(A + tB_2^n)|.$$

Moreover, if (A_N) is a sequence of non-empty compact subset of $\mathbb{R}^n$ tending in Hausdorff distance to a compact subset A of $\mathbb{R}^n$, then by [79], theorem 3, for every $t > 0$ such that $V'_A(t)$ exists

$$\lim_{N\to+\infty} |\partial(A_N + tB_2^n)| = |\partial(A + tB_2^n)|.$$

Let $t \geq \mathrm{diam}(A)$, we apply this result to $A_N = A + t_N B_2^n$, where (t_N) is a sequence of non-negative numbers tending to 0. We obtain that

$$\lim_{N\to+\infty} V'_A(t + t_N) = V'_A(t).$$

Hence, V'_A is right continuous at t. Let t, t_0 be such that $t > t_0 > \mathrm{diam}(A)$, we now apply the result of Stachó to $A_N = A + (t_0 - t_N)B_2^n$, where (t_N) is a sequence of non-negative numbers tending to 0. We obtain

$$\lim_{N\to+\infty} |\partial(A_N + (t - t_0)B_2^n)| = |\partial(A + t_0 B_2^n + (t - t_0)B_2^n)|$$

that is

$$\lim_{N\to+\infty} V'_A(t - t_N) = V'_A(t).$$

Hence, V_A' is left continuous at t. We conclude that V_A is continuously differentiable on $[\mathrm{diam}(A), +\infty)$.

Let us denote $g_A(\varepsilon) = |\varepsilon A + B_2^n|$. Since

$$g_A(\varepsilon) = |\varepsilon A + B_2^n| = \varepsilon^n V_A\left(\frac{1}{\varepsilon}\right)$$

one gets that g_A is continuously differentiable on $(0, \frac{1}{\mathrm{diam}(A)}]$. Moreover, from the inequality (2.6), valid for every compact set A, one deduces that g_A is also differentiable at 0, with $g_A'(0) = nV(\mathrm{conv}(A), B_2^n[n-1])$. □

A special case in dimension 3

We have seen that for every finite subset A of $\mathbb{R}^n$, there exists $t_0(A)$ such that the function $V_A(t) = |A + tB_2^n|$ is $\frac{1}{n}$-concave for $t \geq t_0(A)$. In dimension 3, we can give a bound on $t_0(A)$ in terms of the geometry of A.

In the sequel, A denotes a finite subset of $\mathbb{R}^3$. We denote by D_i a Dirichlet-Voronoi cell with respect to $A = \{x_1, \ldots, x_N\}$, defined for $i \in \{1, \cdots, N\}$ by

$$D_i = \{x \in \mathbb{R}^3; |x - x_i| \leq |x - x_j|, \forall j \in \{1, \ldots, N\}\}.$$

The following condition can be found in [56].

Condition ($\star$) For all faces F of the polytope $\mathrm{conv}(A)$, and all edges E of F, we have

$$\forall x \in E,\ d(x, A \cap E) = d(x, A \cap F).$$

For example, if $\mathrm{conv}(A)$ is simplicial, this condition holds if and only if each face of $\mathrm{conv}(A)$ is a triangle with only acute angles. In general, this condition holds if and only if for every face F of $\mathrm{conv}(A)$, for every edge $[a, b]$ of F and for every vertex c of F, the angle (ca, cb) is acute.

Proposition 2.3.9. *Let A be a finite set in $\mathbb{R}^3$ satisfying the condition ($\star$). Then, $V_A(t) = |A + tB_2^3|$ is $\frac{1}{3}$-concave on $[t_0(A); +\infty)$, where*

$$t_0(A) = \min\{t \geq \mathrm{diam}(A)\,;\, D_i \subset A + tB_2^3, \text{ for all bounded } D_i\}.$$

Proof. Kampf and Kiderlen have shown in [56] that for every $t > t_0(A)$,

$$|\mathrm{conv}(A) + tB_2^3| - |A + tB_2^3| = a_0 + \sum_{p\geq 1} a_p t^{-2p+1}$$

with for all $p \geq 0$, $a_p \geq 0$. Since $V_{\mathrm{conv}(A)}$ is polynomial thus V_A is twice differentiable on $(t_0(A); +\infty)$. It follows that for every $t > t_0(A)$,

$$\begin{aligned} V_A'(t) &= V_{\mathrm{conv}(A)}'(t) + \sum_{p\geq 1}(2p-1)a_p t^{-2p} \\ V_A''(t) &= V_{\mathrm{conv}(A)}''(t) - \sum_{p\geq 1} 2p(2p-1)a_p t^{-2p-1}. \end{aligned}$$

Then, for every $t > t_0(A)$,

$$V_A(t) \leq V_{\mathrm{conv}(A)}(t),\ V_A'(t) \geq V_{\mathrm{conv}(A)}'(t) \text{ and } V_A''(t) \leq V_{\mathrm{conv}(A)}''(t). \tag{2.7}$$

The Brunn-Minkowski inequality implies that $V_{\mathrm{conv}(A)}$ is $\frac{1}{3}$-concave on $\mathbb{R}_+$. We conclude that for every $t > t_0(A)$,

$$\frac{3}{2}V_A(t)V_A''(t) \leq \frac{3}{2}V_{\mathrm{conv}(A)}(t)V_{\mathrm{conv}(A)}''(t) \leq V_{\mathrm{conv}(A)}'(t)^2 \leq V_A'(t)^2.$$

So, V_A is $\frac{1}{3}$-concave on $[t_0(A); +\infty)$. □

Remarks

1. For an arbitrary compact subset A of $\mathbb{R}^3$, if there exists a sequence $(x_N)_{N\in\mathbb{N}^*}$ dense in A such that for every N, the set A_N satisfies the condition $(\star)$, where $A_N = \{x_1, \ldots, x_N\}$, and such that $t_0(A_N)$ is uniformly bounded in N by a t_0, then the function $t \mapsto |A + tB_2^3|$ will be $\frac{1}{3}$-concave on $[t_0; +\infty)$.

2. In dimension $n \geq 4$, there is no hope to prove the inequalities (2.7) because for A being two points at distance 2, one has for every $t \geq 1$

$$\begin{aligned} V_A'(t) &= n|B_2^n|t^{n-1} + 2(n-1)|B_2^{n-1}|t\int_0^1 (t^2 - x^2)^{\frac{n-3}{2}}\mathrm{d}x \\ &< n|B_2^n|t^{n-1} + 2(n-1)|B_2^{n-1}|t^{n-2} = V_{\mathrm{conv}(A)}'(t). \end{aligned}$$

2.4 Further analogies

In Information theory, the Blachman-Stam inequality ([7] and [80]) (1.22), which states that for every independent random vectors X and Y in $\mathbb{R}^n$ with non-zero Fisher information one has

$$\frac{1}{I(X+Y)} \geq \frac{1}{I(X)} + \frac{1}{I(Y)},$$

directly implies all previous mentioned inequalities of Information theory: the entropy power inequality (1.20) (thus the Log-Sobolev inequality for Gaussian measure) and the concavity of entropy power. This last inequality also called the *isoperimetric information inequality* may be deduced from the Blachman-Stam inequality in the same way as the *isoperimetric entropy inequality* was deduced from the entropy power inequality, by applying it to $Y = \sqrt{\varepsilon}G$ and letting ε tend to 0 (see Chapter 1).

Let us now investigate the analogue of the Fisher information and the Blachman-Stam inequality in the Brunn-Minkowski theory. Recall de Bruijn's identity

$$I(X) = \frac{\mathrm{d}}{\mathrm{d}t}_{|t=0} 2H(X + \sqrt{t}G).$$

Since the entropy H is the analogue of the logarithm of the volume $\log|\cdot|$, Dembo, Cover and Thomas [30] proposed, as an analogue of the Fisher information I, the quantity

$$\frac{\mathrm{d}}{\mathrm{d}\varepsilon}_{|\varepsilon=0} (\log|A + \varepsilon B_2^n|) = \frac{|\partial A|}{|A|},$$

for sufficiently regular compact sets A. Thus, in analogy with the Blachman-Stam inequality, one may wonder if for every regular compact sets A and B,

$$\frac{|A+B|}{|\partial(A+B)|} \geq \frac{|A|}{|\partial A|} + \frac{|B|}{|\partial B|}. \tag{2.8}$$

Even restricted to the case where A and B are convex sets, checking the validity of this inequality is not an easy task and it was conjectured by Dembo, Cover and Thomas [30] that the inequality (2.8) holds true in this particular case. In [35], it was shown that this conjecture (for convex sets) holds true in dimension 2 but is false in dimension $n \geq 3$. In particular, it was proved that, if $n \geq 3$, there exists a convex body K such that the inequality (2.8) cannot be true for all $A, B \in \{K + tB_2^n; t \geq 0\}$. It was also proved that if B is a segment then there exists a convex body A for which (2.8) is false.

In another direction, one may also ask if (2.8) holds true for B being arbitrary

Euclidean ball and for every compact set A. In this case, applying (2.8) to A replaced by $A + sB_2^n$ and $B = (t-s)B_2^n$, one would have, for every $0 \leq s \leq t$,

$$\frac{|A + tB_2^n|}{|\partial(A + tB_2^n)|} \geq \frac{|A + sB_2^n|}{|\partial(A + sB_2^n)|} + (t-s)\frac{|B_2^n|}{|\partial B_2^n|} = \frac{|A + sB_2^n|}{|\partial(A + sB_2^n)|} + \frac{t-s}{n},$$

with the notations given above, this would mean that

$$t \mapsto \frac{V_A(t)}{(V_A)'_+(t)} - \frac{t}{n}$$

is non-decreasing on $(0, +\infty)$. This is equivalent to the $\frac{1}{n}$-concavity of V_A, which is the Costa-Cover conjecture.

Chapter 3

A functional version of the parallel volume

In this chapter, I present the second part of my paper *Concavity properties of extensions of the parallel volume* [64]. In this paper, I give a functional version of the conjecture of Costa-Cover and I establish concavity properties of this new functional.

3.1 Functional version

We have seen in Chapter 1 that geometric inequalities can be extended into functional forms. The most famous extension of this type in the Brunn-Minkowski theory is certainly the Prékopa-Leindler inequality (1.8). Functional versions provide new proofs of geometric inequalities and provide new applications. Another examples of such extensions is a functional version of the Blaschke-Santalò inequality and the Mahler conjecture (see *e.g.* [4], [3], [39], [40], [59]).

To do so, we consider in this chapter a functional version of parallel sets of $A \subset \mathbb{R}^n$ and then we study concavity properties of a certain functional associated to it. More precisely, let $f : \mathbb{R}^n \to \mathbb{R}_+$ be a measurable non-negative function and $g : \mathbb{R}^n \to \mathbb{R}_+$ be a log-concave function, we define the function $h_t^{(0)}$, $t \in \mathbb{R}_+$, by

$$h_t^{(0)}(z) = \sup_{z=x+ty} f(x)g(y)^t, \quad z \in \mathbb{R}^n,$$

and in the following, we study concavity properties of the function $t \mapsto \int_{\mathbb{R}^n} h_t^{(0)}(z)\,\mathrm{d}z$ on $\mathbb{R}_+$.

The classical parallel set of A is a particular case by taking $f = 1_A$ and $g = 1_{B_2^n}$. Indeed, one then has

$$1_A(x)1_{B_2^n}(y) = \begin{cases} 1 & \text{if } x \in A \text{ and } y \in B_2^n \\ 0 & \text{otherwise} \end{cases},$$

hence for every $z \in \mathbb{R}^n$ and for every $t \in \mathbb{R}_+$, $h_t^{(0)}(z) = 1_{A+tB_2^n}(z)$.

We also study concavity properties of the function $t \mapsto \int_{\mathbb{R}^n} h_t^{(\gamma)}(z)\,\mathrm{d}z$ on $\mathbb{R}_+$, where

$$h_t^{(\gamma)}(z) = \sup_{\substack{z=x+ty \\ f(x)>0;\ g(y)>0}} (f(x)^\gamma + tg(y)^\gamma)^{\frac{1}{\gamma}},$$

and where $\gamma \in \mathbb{R} \setminus \{0\}$, $f : \mathbb{R}^n \to \mathbb{R}_+$ is a measurable non-negative function and $g : \mathbb{R}^n \to \mathbb{R}_+$ is a γ-concave function.

In chapter 2, we have seen that the classical parallel volume of convex sets is $\frac{1}{n}$-concave on $\mathbb{R}_+$. Since γ-concave functions are the analogue of convex sets, it is natural to expect a concavity property of a functional version of the parallel volume for γ-concave functions.

Proposition 3.1.1. *Let $\gamma \geq -\frac{1}{n}$. Let $f, g : \mathbb{R}^n \to \mathbb{R}_+$ be two γ-concave functions. Then the function $t \mapsto \int_{\mathbb{R}^n} h_t^{(\gamma)}(z)\,\mathrm{d}z$ is $\frac{\gamma}{1+\gamma n}$-concave on $\mathbb{R}_+$, where*

$$h_t^{(\gamma)}(z) = \sup_{\substack{z=x+ty \\ f(x)>0;\ g(y)>0}} (f(x)^\gamma + tg(y)^\gamma)^{\frac{1}{\gamma}}, \quad h_t^{(0)}(z) = \sup_{z=x+ty} f(x)g(y)^t.$$

Proof. We first treat the case $\gamma \neq 0$. For convenience, let us denote $h_t = h_t^{(\gamma)}$. Let $\lambda \in [0,1]$ and $t_1, t_2 \in \mathbb{R}_+$. We want to show that

$$\int_{\mathbb{R}^n} h_{(1-\lambda)t_1+\lambda t_2}(z)\,\mathrm{d}z \geq \left((1-\lambda)\left(\int_{\mathbb{R}^n} h_{t_1}(z)\,\mathrm{d}z\right)^{\frac{\gamma}{1+\gamma n}} + \lambda\left(\int_{\mathbb{R}^n} h_{t_2}(z)\,\mathrm{d}z\right)^{\frac{\gamma}{1+\gamma n}}\right)^{\frac{1+\gamma n}{\gamma}}.$$

From the Borell-Brascamp-Lieb inequality, *c.f.* Theorem 1.4.1 (dimensional Prékopa's inequality), it is sufficient to show that

$$\forall\, z_1, z_2 \in \mathbb{R}^n,\ h_{(1-\lambda)t_1+\lambda t_2}((1-\lambda)z_1 + \lambda z_2) \geq ((1-\lambda)h_{t_1}(z_1)^\gamma + \lambda h_{t_2}(z_2)^\gamma)^{\frac{1}{\gamma}}.$$

By assumptions, the functions f and g are γ-concave and thus are continuous. By truncation, one can assume that f and g are compactly supported. Hence, the supremum

in the definition of h_t is a maximum. Let $z_1, z_2 \in \mathbb{R}^n$ and $\lambda \in [0,1]$. We write for $i \in \{1,2\}$,

$$h_{t_i}(z_i) = \max_{x \in \mathbb{R}^n} \left(f(x)^\gamma + t_i g\left(\frac{z_i - x}{t_i}\right)^\gamma \right)^{\frac{1}{\gamma}}.$$

Let $x_1, x_2 \in \mathbb{R}^n$ such that

$$\forall i \in \{1,2\},\ h_{t_i}(z_i) = \left(f(x_i)^\gamma + t_i g\left(\frac{z_i - x_i}{t_i}\right)^\gamma \right)^{\frac{1}{\gamma}}.$$

We denote

$$h = h_{(1-\lambda)t_1 + \lambda t_2}((1-\lambda)z_1 + \lambda z_2) \quad \text{and} \quad t = (1-\lambda)t_1 + \lambda t_2.$$

We get

$$\begin{aligned}
h &= \sup_{x \in \mathbb{R}^n} \left(f(x)^\gamma + tg\left(\frac{(1-\lambda)z_1 + \lambda z_2 - x}{t}\right)^\gamma \right)^{\frac{1}{\gamma}} \\
&\geq \left(f((1-\lambda)x_1 + \lambda x_2)^\gamma + tg\left(\frac{(1-\lambda)z_1 + \lambda z_2 - ((1-\lambda)x_1 + \lambda x_2)}{t}\right)^\gamma \right)^{\frac{1}{\gamma}} \\
&= \left(f((1-\lambda)x_1 + \lambda x_2)^\gamma + tg\left(\frac{(1-\lambda)t_1}{t}\frac{z_1 - x_1}{t_1} + \frac{\lambda t_2}{t}\frac{z_2 - x_2}{t_2}\right)^\gamma \right)^{\frac{1}{\gamma}} \\
&\geq \left((1-\lambda)f(x_1)^\gamma + \lambda f(x_2)^\gamma + (1-\lambda)t_1 g\left(\frac{z_1 - x_1}{t_1}\right)^\gamma + \lambda t_2 g\left(\frac{z_2 - x_2}{t_2}\right)^\gamma \right)^{\frac{1}{\gamma}} \\
&= ((1-\lambda)h_{t_1}(z_1)^\gamma + \lambda h_{t_2}(z_2)^\gamma)^{\frac{1}{\gamma}}.
\end{aligned}$$

The case $\gamma = 0$ follows with the same argument, using the Prékopa-Leindler inequality (1.8). □

A consequence of the Hölder inequality (1.14) (see Corollary 1.4.8) is that if $f : \mathbb{R}^n \to \mathbb{R}_+$ is β-concave and $g : \mathbb{R}^n \to \mathbb{R}_+$ is γ-concave, then fg is α-concave for every $\alpha, \beta, \gamma \in \mathbb{R} \cup \{+\infty\}$ such that $\beta + \gamma \geq 0$ and $\frac{1}{\beta} + \frac{1}{\gamma} = \frac{1}{\alpha}$. A generalized form of Proposition 3.1.1 follows:

Proposition 3.1.2. *Let $\gamma \geq -\frac{1}{n}$. If a measure μ has a β-concave density, with $\beta \geq -\gamma$, and if $f, g : \mathbb{R}^n \to \mathbb{R}_+$ are two γ-concave functions, then $t \mapsto \int_{\mathbb{R}^n} h_t^{(\gamma)}(z)\,\mathrm{d}\mu(z)$ is $\frac{\alpha}{1+\alpha n}$-concave on $\mathbb{R}_+$, where $\frac{1}{\beta} + \frac{1}{\gamma} = \frac{1}{\alpha}$.*

Proof. By assumption, $f, g : \mathbb{R}^n \to \mathbb{R}_+$ are γ-concave functions, with $\gamma \geq -\frac{1}{n}$, and $\mathrm{d}\mu(z) = \phi(z)\,\mathrm{d}z$, where $\phi : \mathbb{R}^n \to \mathbb{R}_+$ is a β-concave function, with β such that $\beta+\gamma \geq 0$. Let $t_1, t_2 \in \mathbb{R}_+$ and $z_1, z_2 \in \mathbb{R}^n$. We have seen in Proposition 3.1.1 that

$$h^{(\gamma)}_{(1-\lambda)t_1+\lambda t_2}((1-\lambda)z_1+\lambda z_2) \geq \left((1-\lambda)h^{(\gamma)}_{t_1}(z_1)^\gamma + \lambda h^{(\gamma)}_{t_2}(z_2)^\gamma\right)^{\frac{1}{\gamma}}.$$

It follows from the Hölder inequality (1.14) (see Corollary 1.4.8) that

$$h^{(\gamma)}_{(1-\lambda)t_1+\lambda t_2}((1-\lambda)z_1+\lambda z_2)\phi((1-\lambda)z_1+\lambda z_2) \geq \left((1-\lambda)(h^{(\gamma)}_{t_1}(z_1)\phi(z_1))^\alpha + \lambda(h^{(\gamma)}_{t_2}(z_2)\phi(z_2))^\alpha\right)^{\frac{1}{\alpha}},$$

where α is such that $\frac{1}{\alpha} = \frac{1}{\beta} + \frac{1}{\gamma}$. From the Borell-Brascamp-Lieb inequality, *c.f.* Theorem 1.4.1, it follows that

$$\int_{\mathbb{R}^n} h^{(\gamma)}_{(1-\lambda)t_1+\lambda t_2}(z)\phi(z)\,\mathrm{d}z \geq \left((1-\lambda)\left(\int_{\mathbb{R}^n} h^{(\gamma)}_{t_1}(z)\phi(z)\,\mathrm{d}z\right)^s + \lambda\left(\int_{\mathbb{R}^n} h^{(\gamma)}_{t_2}(z)\phi(z)\,\mathrm{d}z\right)^s\right)^{\frac{1}{s}},$$

where $s = \frac{\alpha}{1+\alpha n}$. We conclude that the function $t \mapsto \int_{\mathbb{R}^n} h^{(\gamma)}_t(z)\,\mathrm{d}\mu(z)$ is $\frac{\alpha}{1+\alpha n}$-concave on $\mathbb{R}_+$. □

Before starting the study of concavity properties of the function $t \mapsto \int_{\mathbb{R}} h^{(\gamma)}_t(z)\,\mathrm{d}z$ in dimension 1, let us rely $h^{(\gamma)}_t$ with the Hopf-Lax solution of the Hamilton-Jacobi equation. Since by assumption g is γ-concave, hence for $\gamma < 0$ one has $g^\gamma = V$, where V is a convex function. It follows that

$$h^{(\gamma)}_t(z) = \sup_{x\in\mathbb{R}^n}\left(f(x)^\gamma + tV\left(\frac{z-x}{t}\right)\right)^{\frac{1}{\gamma}} = \left(Q^{(V)}_t f^\gamma(z)\right)^{\frac{1}{\gamma}},$$

where for arbitrary convex function V and arbitrary function u,

$$Q^{(V)}_t u(z) = \inf_{x\in\mathbb{R}^n}\left(u(x) + tV\left(\frac{z-x}{t}\right)\right).$$

This expression can be extended to $\gamma = 0$ in the same way, by writing

$$h^{(0)}_t(z) = \sup_{x\in\mathbb{R}^n} f(x)\mathrm{e}^{-tV\left(\frac{z-x}{t}\right)} = \mathrm{e}^{-Q^{(V)}_t(-\log(f))(z)}.$$

The Hopf-Lax solution has a particular interest. For example, it can be used to show that *hypercontractivity* of this solution is equivalent to get *log-Sobolev inequalities* (see

e.g. [9], [44]). We pursue the study of this solution by asking for concavity properties in time of the Hopf-Lax solution of the Hamilton-Jacobi equation.

In the sequel, we assume that

$$\lim_{|z|\to+\infty} \frac{V(z)}{|z|} = +\infty.$$

For Lipschitz continuous function u, it is known (see *e.g.* [31]) that $Q_t^{(V)}u$ is the solution, called *Hopf-Lax solution*, of the following partial differential equation, called *Hamilton-Jacobi equation*:

$$\begin{cases} \frac{\partial}{\partial t}h(t,z) + V^*(\nabla h(t,z)) = 0 & \text{on } (0,+\infty)\times\mathbb{R}^n \\ h(t,z) = u(z) & \text{on } \{t=0\}\times\mathbb{R}^n \end{cases},$$

where V^* is the Legendre transform of V defined on $\mathbb{R}^n$ by

$$V^*(y) = \sup_{x\in\mathbb{R}^n}(< x, y > -V(x)).$$

It is shown in [31] that if u is Lipschitz continuous on $\mathbb{R}^n$ then $Q_t^{(V)}u$ is Lipschitz continuous on $[0,+\infty)\times\mathbb{R}^n$. However, for arbitrary convex function V, $t \mapsto Q_t^{(V)}u$ is not necessarily continuous on 0.

Let us show partial positive answers to concavity properties of the function $t \mapsto \int_{\mathbb{R}} h_t^{(\gamma)}(z)\,\mathrm{d}z$ in dimension 1. In fact, in dimension 1, we can improve the concavity expected:

Theorem 3.1.3. *Let $\gamma \in (-\infty;0]$. Let $f:\mathbb{R}\to\mathbb{R}_+$ be such that f^γ (to be interpreted by $-\log(f)$ when $\gamma=0$) is a bounded Lipschitz continuous function. Let us define for every $y\in\mathbb{R}$, $V(y)=\frac{|y|^p}{p}$ with $p\geq 1$, and for every $z\in\mathbb{R}$,*

$$h_t^{(\gamma)}(z) = \sup_{\substack{z=x+ty \\ f(x)>0;\ V(y)>0}} (f(x)^\gamma + tV(y))^{\frac{1}{\gamma}}, \qquad h_t^{(0)}(z) = \sup_{z=x+ty} f(x)\mathrm{e}^{-tV(y)}.$$

If $h_t^{(\gamma)}$ is twice continuously differentiable and if $\lim_{z\to\pm\infty}\frac{\partial}{\partial z}h_t^{(\gamma)}(z)=0$, then the function $t\mapsto\int_{\mathbb{R}} h_t^{(\gamma)}(z)\,\mathrm{d}z$ is concave on $\mathbb{R}_+$.

Proof. We treat the case $\gamma\neq 0$, the case $\gamma=0$ follows with the same argument. Let us denote for $t\in\mathbb{R}_+$,

$$F(t) = \int_{\mathbb{R}} h_t^{(\gamma)}(z)\,\mathrm{d}z.$$

For $p = 1$, the function F is constant. We then consider $p > 1$. We have seen above that

$$h_t^{(\gamma)}(z) = \left(Q_t^{(V)} f^\gamma(z)\right)^{\frac{1}{\gamma}}.$$

For convenience, we set $h(t,z) = Q_t^{(V)} f^\gamma(z)$ and $h' = \frac{\partial}{\partial z} h$. We get by a direct computation that

$$F'(t) = -\frac{1}{\gamma} \int_{\mathbb{R}} V^*(h')\, h^{\frac{1-\gamma}{\gamma}},$$

$$F''(t) = \frac{1}{\gamma} \int_{\mathbb{R}} h'' \left((V^*)'(h')\right)^2 h^{\frac{1-\gamma}{\gamma}} + \frac{1-\gamma}{\gamma^2} \int_{\mathbb{R}} (V^*(h'))^2 h^{\frac{1-2\gamma}{\gamma}}.$$

We assumed that $V(u) = \frac{|u|^p}{p}$. Hence $V^*(u) = \frac{|u|^q}{q}$, with $\frac{1}{p} + \frac{1}{q} = 1$. It follows that

$$F''(t) = \frac{1}{\gamma} \int_{\mathbb{R}} h''(h')^{2q-2} h^{\frac{1-\gamma}{\gamma}} + \frac{1-\gamma}{\gamma^2} \int_{\mathbb{R}} \frac{(h')^{2q}}{q^2} h^{\frac{1-2\gamma}{\gamma}}.$$

Integration by parts with $h''(h')^{2q-3}$ and $h' h^{\frac{1-\gamma}{\gamma}}$ gives

$$\frac{1}{\gamma} \int_{\mathbb{R}} h''(h')^{2q-2} h^{\frac{1-\gamma}{\gamma}} = -\frac{1}{2q-2} \left(\frac{1}{\gamma} \int_{\mathbb{R}} h''(h')^{2q-2} h^{\frac{1-\gamma}{\gamma}} + \frac{1-\gamma}{\gamma^2} \int_{\mathbb{R}} (h')^{2q} h^{\frac{1-2\gamma}{\gamma}} \right).$$

Then

$$\frac{2q-1}{\gamma} \int_{\mathbb{R}} h''(h')^{2q-2} h^{\frac{1-\gamma}{\gamma}} = -\frac{1-\gamma}{\gamma^2} \int_{\mathbb{R}} (h')^{2q} h^{\frac{1-2\gamma}{\gamma}}.$$

Finally,

$$F''(t) = -\frac{1-\gamma}{\gamma^2} \frac{(q-1)^2}{q^2(2q-1)} \int_{\mathbb{R}} (h')^{2q} h^{\frac{1-2\gamma}{\gamma}} \leq 0.$$

We conclude that $t \mapsto \int_{\mathbb{R}} h_t^{(\gamma)}(z)\, \mathrm{d}z$ is concave on $\mathbb{R}_+$. $\square$

3.2 Links with weighted Brascamp-Lieb-type inequalities

In this section, we express the s-concavity, $s \in \mathbb{R}$, of the function $t \mapsto \int_{\mathbb{R}^n} h_t^{(\gamma)}(z)\,\mathrm{d}z$ in term of a weighted Brascamp-Lieb-type inequality.

Proposition 3.2.1. *Let $\gamma \in (-\frac{1}{n};0)$ and $s \in \mathbb{R}$. Let $f : \mathbb{R}^n \to \mathbb{R}_+$ be such that f^γ is a bounded Lipschitz continuous function. Let $V : \mathbb{R}^n \to \mathbb{R}_+$ be a convex function such that $\lim_{|z|\to+\infty} V(z)/|z| = +\infty$ and such that the Legendre transform V^* is differentiable. Let us define for every $z \in \mathbb{R}^n$,*

$$h_t^{(\gamma)}(z) = \sup_{\substack{z=x+ty \\ f(x)>0;\ V(y)>0}} (f(x)^\gamma + tV(y))^{\frac{1}{\gamma}}.$$

If $h_t^{(\gamma)}$ is twice continuously differentiable and if $G \in L^2(\mu)$, where

$$\mathrm{d}\mu(z) = \frac{(Q_t^{(V)} f^\gamma(z))^{\frac{1}{\gamma}}}{\int (Q_t^{(V)} f^\gamma)^{\frac{1}{\gamma}}}\mathrm{d}z \text{ and } G = \frac{V^*(\nabla Q_t^{(V)} f^\gamma)}{Q_t^{(V)} f^\gamma},$$

then the function $t \mapsto \int_{\mathbb{R}^n} h_t^{(\gamma)}(z)\,\mathrm{d}z$ is s-concave if and only if

$$\begin{aligned} Var_\mu(G) \quad \leq \quad & -\frac{\gamma}{1-\gamma}\int \frac{< (Hess\, Q_t^{(V)} f^\gamma)(\nabla V^*)(\nabla Q_t^{(V)} f^\gamma), (\nabla V^*)(\nabla Q_t^{(V)} f^\gamma) >}{Q_t^{(V)} f^\gamma}\,\mathrm{d}\mu \\ & + \frac{\gamma - s}{1-\gamma}\left(\int G\,\mathrm{d}\mu\right)^2, \end{aligned}$$

Proof. To prove the s-concavity of the function $F : t \mapsto \int_{\mathbb{R}^n} h_t^{(\gamma)}(z)\,\mathrm{d}z$, it is a natural idea to proceed by differentiation. We have seen previously that one may write

$$h_t^{(\gamma)}(z) = \left(Q_t^{(V)} f^\gamma(z)\right)^{\frac{1}{\gamma}}.$$

For convenience, we set $\phi = f^\gamma$ and $Q_t = Q_t^{(V)}$. We get by a direct computation

$$\frac{\partial}{\partial t} h_t^{(\gamma)} = -\frac{1}{\gamma} V^*(\nabla Q_t \phi)(Q_t \phi)^{\frac{1-\gamma}{\gamma}},$$

$$\begin{aligned}\frac{\partial^2}{\partial t^2}h_t^{(\gamma)} &= \frac{1}{\gamma} < (Hess\, Q_t\phi)(\nabla V^*)(\nabla Q_t\phi), (\nabla V^*)(\nabla Q_t\phi) > (Q_t\phi)^{\frac{1-\gamma}{\gamma}} \\ &\quad + \frac{1-\gamma}{\gamma^2}(V^*(\nabla Q_t\phi))^2(Q_t\phi)^{\frac{1-2\gamma}{\gamma}}.\end{aligned}$$

Thus the function F is s-concave if and only if $F(t)F''(t) \leq (1-s)F'(t)^2$ if and only if

$$\begin{aligned}Var_\mu(G) &\leq -\frac{\gamma}{1-\gamma}\int \frac{< (Hess\, Q_t\phi)(\nabla V^*)(\nabla Q_t\phi), (\nabla V^*)(\nabla Q_t\phi) >}{Q_t\phi}\,\mathrm{d}\mu \\ &\quad + \frac{\gamma - s}{1-\gamma}\left(\int G\,\mathrm{d}\mu\right)^2,\end{aligned}$$

where

$$\mathrm{d}\mu(z) = \frac{(Q_t\phi(z))^{\frac{1}{\gamma}}}{\int (Q_t\phi)^{\frac{1}{\gamma}}}\mathrm{d}z \text{ and } G = \frac{V^*(\nabla Q_t\phi)}{Q_t\phi}.$$

□

Remark. For $\gamma = 0$ and $V(u) = \frac{|u|^2}{2}$, one may use the same argument to get that $t \mapsto \int_{\mathbb{R}^n} h_t^{(0)}(z)\,\mathrm{d}z$ is s-concave if and only if

$$Var_\mu(|\nabla Q_t\phi|^2) \leq 4\int < (Hess\, Q_t\phi)\nabla Q_t\phi, \nabla Q_t\phi > \,\mathrm{d}\mu,$$

where $\phi = -\log f$ and

$$\mathrm{d}\mu(z) = \frac{\mathrm{e}^{-Q_t\phi(z)}}{\int \mathrm{e}^{-Q_t\phi}}\,\mathrm{d}z.$$

From Proposition 3.1.1, if f is γ-concave then the inequality of Proposition 3.2.1 is true and we get the following weighted Brascamp-Lieb-type inequality by tending t to 0:

Corollary 3.2.2. *Let $\gamma \in (-\frac{1}{n}; 0)$. For every $V, \phi : \mathbb{R}^n \to \mathbb{R}_+$ convex differentiable functions such that $\lim_{|z|\to+\infty} V(z)/z = +\infty$ and such that $G \in L^2(\mu)$, where $\mathrm{d}\mu(z) = \frac{\phi^{\frac{1}{\gamma}}(z)}{\int \phi^{\frac{1}{\gamma}}}\,\mathrm{d}z$ and $G = \frac{V(\nabla\phi)}{\phi}$, we get*

$$Var_\mu(G) \leq -\frac{\gamma}{1-\gamma}\int \frac{< (Hess\phi)^{-1}\nabla G\phi, \nabla G\phi >}{\phi}\mathrm{d}\mu + \frac{\gamma - s}{1-\gamma}\left(\int G\,\mathrm{d}\mu\right)^2,$$

We reproved a result of Bobkov and Ledoux in [12] (for a smaller class of function G) who used the same idea since Corollary 3.2.2 is derived from the Borell-Brascamp-Lieb

inequality (dimensional Prékopa inequality) but using a more suitable function instead of the Hopf-Lax solution we used. In fact, Bobkov and Ledoux already noticed in [10] that one can deduce the classical Brascamp-Lieb inequality from the classical Prékopa inequality (corresponding to the log-concave case). This idea has been explored by Cordero-Erausquin and Klartag in [23] where they showed that in fact the converse is true, *i.e.* we can derive the Prékopa inequality from the Brascamp-Lieb inequality. More recently, Nguyen in [68] generalized the work of Cordero-Erausquin and Klartag in the case of γ-concave measure (even for $\gamma \geq 0$) and improved the Brascamp-Lieb-Type inequality of Bobkov-Ledoux (inequality (3.2.2)).

Chapter 4

Concavity properties of convex measures

In this chapter, the first section is devoted to the first part of my paper *Concavity properties of extensions of the parallel volume* [64]. In this paper, I generalize the notion of parallel volume by considering general convex measures instead of the Lebesgue measure and I prove concavity properties for this new functional.

In the second part of this chapter, I present my paper *On improvement of the concavity of convex measures* [65]. In this paper, I prove that a general subclass of convex measures are $\frac{1}{n}$-concave in the terminology of Borell under additional assumptions on the measure or on the sets, such as symmetries. This generalizes a result of Gardner and Zvavitch [42].

4.1 The parallel μ-volume

In this section, we generalize the parallel volume in the more general context of s-concave measures instead of the Lebesgue measure, by considering the function $t \mapsto \mu(A + tB_2^n)$, where A is a compact subset of $\mathbb{R}^n$. We will establish concavity property of this generalized parallel volume, called *parallel μ-volume* in the following. More precisely, given a s-concave measure μ, we will show in special cases that the function $t \mapsto \mu(A + tB_2^n)$ is s-concave on $\mathbb{R}_+$, which generalizes works in Chapter 2 about the concavity of the classical parallel volume.

Let $a \in \mathbb{R}^n$. The Dirac measure $\delta_{\{a\}}$ is $+\infty$-concave and we notice that the function $t \mapsto \delta_{\{a\}}(A + tB_2^n)$ is constant on its support and thus is $+\infty$-concave on $\mathbb{R}_+$. Since

the function $t \mapsto \mu(A + tB_2^n)$ is non-decreasing, it follows that the parallel μ-volume is $-\infty$-concave on $\mathbb{R}_+$ for every non-negative measure.

Notice that for every s-concave μ, the parallel μ-volume of every convex set A is s-concave on $\mathbb{R}_+$. Indeed, let μ be a s-concave measure and A be a compact convex subset of $\mathbb{R}^n$, then for every $\lambda \in [0,1]$ and every $t_1, t_2 \in \mathbb{R}_+$, we get

$$\begin{aligned}\mu(A + ((1-\lambda)t_1 + \lambda t_2)B_2^n) &= \mu((1-\lambda)(A + t_1B_2^n) + \lambda(A + t_2B_2^n)) \\ &\geq ((1-\lambda)\mu(A + t_1B_2^n)^s + \lambda\mu(A + t_2B_2^n)^s)^{\frac{1}{s}}.\end{aligned}$$

Notice also that the s-concavity of the parallel μ-volume of a fixed compact set A, with μ s-concave, gives a refinement since it then follows that

$$\begin{aligned}\mu((1-\lambda)(A + t_1B_2^n) + \lambda(A + t_2B_2^n)) &\geq \mu(A + ((1-\lambda)t_1 + \lambda t_2)B_2^n) \\ &\geq ((1-\lambda)\mu(A + t_1B_2^n)^s + \lambda\mu(A + t_2B_2^n)^s)^{\frac{1}{s}}.\end{aligned}$$

In the sequel, μ will denote a s-concave measure which admits a density with respect to the n-dimensional Lebesgue measure. For $\mu \neq 0$, one has $s \leq \frac{1}{n}$.

We first establish a preliminary lemma in dimension 1.

Lemma 4.1.1. *Let $s \leq 1$. Let A be a compact subset of $\mathbb{R}$ and μ be a s-concave measure in $\mathbb{R}$. Let us denote for $t \in \mathbb{R}_+$, $V_A^\mu(t) = \mu(A + tB_2^1)$. Then $(V_A^\mu)^s$ (to be interpreted by $\log(V_A^\mu)$ if $s = 0$) admits left and right derivatives on $\mathbb{R}_+^*$. We denote $((V_A^\mu)^s)'_-$ (resp. $((V_A^\mu)^s)'_+$) the left (resp. right) derivative of $(V_A^\mu)^s$. If $s \geq 0$, then*

$$((V_A^\mu)^s)'_- \geq ((V_A^\mu)^s)'_+$$

and if $s < 0$, then

$$((V_A^\mu)^s)'_- \leq ((V_A^\mu)^s)'_+.$$

Proof. We denote ψ the density of μ. Notice that for every $t_0 > 0$, the set $A + t_0B_2^1$ is a disjoint finite union of intervals. Then, setting $A + t_0B_2^1$ instead of A, we can assume that $A = \cup_{i=1}^N [a_i, b_i]$, with $a_1 < b_1 < \cdots < a_N < b_N$. If $N = 1$, we get for every $t \in \mathbb{R}_+$,

$$V_A^\mu(t) = \int_{a_1 - t}^{b_1 + t} \psi(x)\,\mathrm{d}x.$$

Hence, V_A^μ is differentiable on $\mathbb{R}_+$. It follows that $((V_A^\mu)^s)'_- = ((V_A^\mu)^s)'_+$. If $N \geq 2$, we denote $t_i = \frac{b_i + a_{i+1}}{2}$, for $i \in \{1, \ldots, N-1\}$. We notice that V_A^μ is differentiable on

$\mathbb{R}_+ \setminus \{t_1, \dots, t_{N-1}\}$ and for every $t \in \mathbb{R}_+ \setminus \{t_1, \dots, t_{N-1}\}$, we get

$$(V_A^\mu)'_+(t) = \sum_{a \in \partial(A+tB_2^1)} \psi(a)$$
$$(V_A^\mu)'_-(t) = \sum_{a \in \partial(A+t\,\mathrm{int}(B_2^1))} \psi(a).$$

Notice that $\overline{A+tB_2^1} = \overline{A+t\,\mathrm{int}(B_2^1)}$ thus $\partial(A+tB_2^1) \subset \partial(A+t\,\mathrm{int}(B_2^1))$. Hence for every $i \in \{1, \dots, N-1\}$, we get

$$(V_A^\mu)'_-(t_i) \geq (V_A^\mu)'_+(t_i).$$

For every $t \neq t_i$ and $s \neq 0$, one has

$$((V_A^\mu)^s)'(t) = s(V_A^\mu)'(t)(V_A^\mu)^{s-1}(t),$$

thus we conclude that if $s > 0$ then $((V_A^\mu)^s)'_- \geq ((V_A^\mu)^s)'_+$, and if $s < 0$ then $((V_A^\mu)^s)'_- \leq ((V_A^\mu)^s)'_+$. For every $t \neq t_i$ and $s = 0$, one has

$$(\log(V_A^\mu))'(t) = \frac{(V_A^\mu)'(t)}{V_A^\mu(t)},$$

thus $(\log(V_A^\mu))'_- \geq (\log(V_A^\mu))'_+$. □

Let us study the concavity of the parallel μ-volume first in dimension 1.

Theorem 4.1.2. *Let $s \leq \frac{1}{2}$. Let A be a compact subset of $\mathbb{R}$ and μ_0 be a s-concave measure in $\mathbb{R}$. Then, the function $t \mapsto V_A^{\mu_0}(t) = \mu_0(A+tB_2^1)$ is s-concave on $\mathbb{R}_+$.*

Proof. Let $s \leq \frac{1}{2}$. For $s = -\infty$, we noticed above that the result holds true. We assume $-\infty < s \leq \frac{1}{2}$. We also assume $s \neq 0$, the case $s = 0$ follows by continuity. Let μ_0 be a s-concave measure on $\mathbb{R}$ and A be a compact subset of $\mathbb{R}$. Notice that for every $t > 0$, $A + tB_2^1$ is a disjoint finite union of intervals. Thus, by setting $A + tB_2^1$ for arbitrary $t > 0$ instead of A, we can assume that $A = \cup_{i=1}^N [a_i, b_i]$, with $a_i < b_i$ and $N \in \mathbb{N}^*$. We also assume $N \geq 2$, otherwise A is convex and we immediately conclude. Notice that for

$$t_0 = \frac{1}{2} \sup_{i=1,\dots,N-1} |a_{i+1} - b_i|,$$

then $A + t_0 B_2^1$ is convex and for every $t < t_0$, the set $A + tB_2^1$ is not convex. Thus, $t \mapsto \mu_0(A + tB_2^1)$ is s-concave on $[t_0, +\infty)$.

Now, let us show that $t \mapsto \mu_0(A + tB_2^1)$ is s-concave on $(0; t_0)$. We use a localization theorem due to Kannan, Lovász and Simonovits [62], [57] in the more precise form established by Fradelizi and Guédon [36], [37]. We denote $K = A + t_0 B_2^1$, then K is a convex body. We consider the restriction of μ_0 over K, then it is a finite measure that we can assume to be a probability measure without loss of generality. For convenience, we always denote this measure μ_0. We call $\mathcal{P}(K)$ the set of all probabilities whose support is included in K. We have $\mu_0 \in \mathcal{P}(K)$.

Step 1: Reduction to extremal measures.
Let $t_1, t_2 \in (0, t_0)$ such that $\mu_0(A + t_1 B_2^1)\mu_0(A + t_2 B_2^1) > 0$. We want to show that

$$\mu_0\left(A + \frac{t_1 + t_2}{2} B_2^1\right) \geq \left(\frac{\mu_0(A + t_1 B_2^1)^s}{2} + \frac{\mu_0(A + t_2 B_2^1)^s}{2}\right)^{\frac{1}{s}} \tag{4.1}$$

which is sufficient because of the continuity property of $V_A^{\mu_0}$. We assume $t_1 < t_2$ without loss of generality. Let $0 < \varepsilon < t_2 - t_1$. We will prove that $V_A^{\mu_0}$ is s-concave on $[t_1 + \varepsilon, t_2]$ which will imply inequality (4.1) by continuity. We set

$$\alpha_\varepsilon = \left(\frac{1}{2}\left(\frac{\mu_0(A + t_2 B_2^1)^s}{\mu_0(A + (t_1 + \varepsilon) B_2^1)^s} + 1\right)\right)^{\frac{1}{s}}$$

and

$$\beta_\varepsilon = \frac{\mu_0(A + t_2 B_2^1)}{\mu_0(A + (t_1 + \varepsilon) B_2^1)}.$$

Notice that $\beta_\varepsilon \geq 1$. If $\beta_\varepsilon = 1$, then $V_A^{\mu_0}$ is constant on $[t_1 + \varepsilon, t_2]$ and thus is s-concave. We assume thereafter that $\beta_\varepsilon > 1$. We define $f : K \to \mathbb{R}$ by

$$f = 1_{A + t_2 B_2^1} - \beta_\varepsilon 1_{\mathrm{int}(A + (t_1 + \varepsilon) B_2^1)}$$

and we set

$$P_f = \left\{\mu \in \mathcal{P}(K); \mu \ s\text{-concave such that} \int f \, \mathrm{d}\mu \geq 0\right\}.$$

Notice that f is upper semi-continuous and that $\mu_0 \in P_f$. At last, we define $\Phi_\varepsilon : \mathcal{P}(K) \to \mathbb{R}$ by

$$\Phi_\varepsilon = \alpha_\varepsilon 1_{A + t_1 B_2^1} - 1_{\mathrm{int}\left(A + \frac{(t_1 + \varepsilon) + t_2}{2} B_2^1\right)}.$$

Notice that Φ_ε is upper semi-continuous and convex. We shall prove that for every $\mu \in P_f$, $\Phi_\varepsilon(\mu) \leq 0$. It will then follow that $\phi_\varepsilon(\mu_0) \leq 0$ and by tending ε to 0, we will

get inequality (4.1). By the geometric localization theorem [36], we get

$$\sup_{\mu \in P_f} \Phi_\varepsilon(\mu) = \Phi_\varepsilon(\nu)$$

where ν is either a Dirac measure at a point x such that $f(x) \geq 0$, or either a probability measure which admits a s-affine density supported on a segment $[a, b]$, such that $\int f \, \mathrm{d}\nu = 0$ and $\forall x \in (a, b)$, $\int_{[x,b]} f \, \mathrm{d}\nu < 0$.

Step 2: s-concavity for extremal measures

- We assume that $\nu = \delta_x$ with x such that $f(x) \geq 0$. The condition $f(x) \geq 0$ says that

$$1_{A+t_2 B_2^1}(x) \geq \beta_\varepsilon 1_{\mathrm{int}(A+(t_1+\varepsilon)B_2^1)}(x).$$

Since $\beta_\varepsilon > 1$, it follows that $x \notin \mathrm{int}(A + (t_1 + \varepsilon)B_2^1)$ and thus $x \notin A + t_1 B_2^1$. Hence,

$$\Phi_\varepsilon(\delta_x) = -\delta_x \left(\mathrm{int} \left(A + \frac{(t_1 + \varepsilon) + t_2}{2} B_2^1 \right) \right) \leq 0.$$

- We assume that ν admits a density ψ γ-affine with

$$\gamma = \frac{s}{1 - s},$$

supported in a segment $[a, b]$, *i.e.* for every x in $\mathbb{R}$, $\psi(x) = (mx + p)^{\frac{1}{\gamma}} 1_{[a,b]}(x)$, with m and p such that for every $x \in [a, b]$, $mx + p \geq 0$. Without loss of generality, we can assume that $m = 1$. We also assume that ν satisfies $\int f \, \mathrm{d}\nu = 0$ and $\int_{[x,b]} f \, \mathrm{d}\nu < 0$ on (a, b). We will show that

$$\nu \left(A + \frac{(t_1 + \varepsilon) + t_2}{2} B_2^1 \right) \geq \left(\frac{\nu(A + (t_1 + \varepsilon)B_2^1)^s}{2} + \frac{\nu(A + t_2 B_2^1)^s}{2} \right)^{\frac{1}{s}}.$$

It will follow that

$$\Phi_\varepsilon(\nu) \leq 0.$$

In fact, we will prove the s-concavity of $t \mapsto V_A^\nu(t) = \nu(A + tB_2^1)$ on $[t_1 + \varepsilon, t_2]$ by differentiation. The proof will be local on $[t_1 + \varepsilon, t_2]$. The condition $\int_{[x,b]} f \, \mathrm{d}\nu < 0$ on (a, b) says that for every $x \in (a, b)$

$$\nu((A + t_2 B_2^1) \cap [x, b]) < \beta_\varepsilon \nu((A + (t_1 + \varepsilon)B_2^1) \cap [x, b]). \tag{4.2}$$

If $b \notin A + (t_1 + \varepsilon)B_2^1$, then there exists $x \in (a, b)$ such that $(A + (t_1 + \varepsilon)B_2^1) \cap [x, b] = \emptyset$. This contradicts (4.2). It follows that $b \in A + (t_1 + \varepsilon)B_2^1$. For convenience, we denote A for $A + (t_1 + \varepsilon)B_2^1$. Notice that $1 - \gamma \geq 0$ and $1 + \gamma \geq 0$.

Case 1: The case $\gamma > 0$.
Sub-case 1: The case $a \notin A$.
Recall that $b \in A$. The set A is a disjoint finite union of intervals, then we can assume that $A = \cup_{i=1}^{N-1}[a_i, b_i] \cup [a_N, b]$, with $a < a_1 < b_1 < \cdots < a_N < b$. We denote $V_A^\nu(t) = \nu(A + tB_2^1)$. For t small enough, we get

$$\begin{aligned}
V_A^\nu(t) &= \sum_{i=1}^{N-1} \int_{a_i - t}^{b_i + t} (x+p)^{\frac{1}{\gamma}} \, \mathrm{d}x + \int_{a_N - t}^{b} (x+p)^{\frac{1}{\gamma}} \, \mathrm{d}x \\
(V_A^\nu)'(t) &= \sum_{i=1}^{N-1} \left((b_i + t + p)^{\frac{1}{\gamma}} + (a_i - t + p)^{\frac{1}{\gamma}} \right) + (a_N - t + p)^{\frac{1}{\gamma}} \\
(V_A^\nu)''(t) &= \frac{1}{\gamma} \left(\sum_{i=1}^{N-1} \left((b_i + t + p)^{\frac{1-\gamma}{\gamma}} - (a_i - t + p)^{\frac{1-\gamma}{\gamma}} \right) - (a_N - t + p)^{\frac{1-\gamma}{\gamma}} \right) \\
&= \frac{1}{\gamma} \left(-(a_1 - t + p)^{\frac{1-\gamma}{\gamma}} + \sum_{i=2}^{N} \left((b_{i-1} + t + p)^{\frac{1-\gamma}{\gamma}} - (a_i - t + p)^{\frac{1-\gamma}{\gamma}} \right) \right) \\
&\leq 0.
\end{aligned}$$

Hence, V_A^ν is concave, which is an improvement of the result expected.

Sub-case 2: The case $a \in A$.
We can assume that $A = [a, b_1] \cup \cdots \cup [a_N, b]$, with $a < b_1 < \cdots < a_N < b$. For t small enough, we get

$$\begin{aligned}
V_A^\nu(t) &= \int_{a}^{b_1 + t} (x+p)^{\frac{1}{\gamma}} \mathrm{d}x + \sum_{i=2}^{N-1} \int_{a_i - t}^{b_i + t} (x+p)^{\frac{1}{\gamma}} \mathrm{d}x + \int_{a_N - t}^{b} (x+p)^{\frac{1}{\gamma}} \mathrm{d}x \\
(V_A^\nu)'(t) &= (b_1 + t + p)^{\frac{1}{\gamma}} + \cdots + (a_N - t + p)^{\frac{1}{\gamma}} \\
(V_A^\nu)''(t) &= \frac{1}{\gamma} \left(\sum_{i=2}^{N} \left((b_{i-1} + t + p)^{\frac{1-\gamma}{\gamma}} - (a_i - t + p)^{\frac{1-\gamma}{\gamma}} \right) \right) \\
&\leq 0.
\end{aligned}$$

Hence, V_A^ν is concave.

Case 2: The case $\gamma < 0$.

In the following, we use the notations

$$a_i(t) = (a_i - t + p)^{\frac{1}{\gamma}}, \quad b_i(t) = (b_i + t + p)^{\frac{1}{\gamma}}, \quad b = (b + p)^{\frac{1}{\gamma}}.$$

Notice that

$$0 \le b \le a_N(t) \le \cdots \le b_1(t) \le a_1(t).$$

Sub-case 1: The case $a \notin A$.

For t small enough, we get

$$\begin{aligned}
V_A^\nu(t) &= \sum_{i=1}^{N-1} \int_{a_i - t}^{b_i + t} (x+p)^{\frac{1}{\gamma}} \, \mathrm{d}x + \int_{a_N - t}^{b} (x+p)^{\frac{1}{\gamma}} \, \mathrm{d}x \\
&= \frac{\gamma}{\gamma+1} \left(\sum_{i=1}^{N-1} \left(b_i(t)^{\gamma+1} - a_i(t)^{\gamma+1} \right) + b^{\gamma+1} - a_N(t)^{\gamma+1} \right) \\
(V_A^\nu)'(t) &= \sum_{i=1}^{N-1} (b_i(t) + a_i(t)) + a_N(t) \\
(V_A^\nu)''(t) &= \frac{1}{\gamma} \left(\sum_{i=1}^{N-1} \left(b_i(t)^{1-\gamma} - a_i(t)^{1-\gamma} \right) - a_N(t)^{1-\gamma} \right).
\end{aligned}$$

We have V_A^ν s-concave if and only if $V_A^\nu(t)(V_A^\nu)''(t) \le (1-s)(V_A^\nu)'(t)^2$ if and only if

$$\begin{aligned}
&\left(\sum_{i=1}^{N-1} \left(b_i(t)^{\gamma+1} - a_i(t)^{\gamma+1} \right) + b^{\gamma+1} - a_N(t)^{\gamma+1} \right) \\
&\quad \times \left(\sum_{i=1}^{N-1} \left(b_i(t)^{1-\gamma} - a_i(t)^{1-\gamma} \right) - a_N(t)^{1-\gamma} \right) \\
&\qquad \le \left(\sum_{i=1}^{N-1} (b_i(t) + a_i(t)) + a_N(t) \right)^2.
\end{aligned}$$

For convenience, we write b_i for $b_i(t)$ and a_i for $a_i(t)$. In fact, we prove a stronger inequality:

$$\left(\sum_{i=1}^{N-1} \left(b_i^{\gamma+1} - a_i^{\gamma+1} \right) + b^{\gamma+1} - a_N^{\gamma+1} \right) \left(\sum_{i=1}^{N-1} \left(b_i^{1-\gamma} - a_i^{1-\gamma} \right) - a_N^{1-\gamma} \right) \le \sum_{i=1}^{N-1} \left(b_i^2 + a_i^2 \right) + a_N^2.$$

We prove this inequality by induction on $N \geq 2$. For $N = 2$, we have to prove

$$\left(b_1^{\gamma+1} - a_1^{\gamma+1} + b^{\gamma+1} - a_2^{\gamma+1}\right)\left(b_1^{1-\gamma} - a_1^{1-\gamma} - a_2^{1-\gamma}\right) \leq b_1^2 + a_1^2 + a_2^2. \tag{4.3}$$

We get

$$\begin{aligned}
(4.3) \iff\ & b_1^{1+\gamma}(-a_1^{1-\gamma} - a_2^{1-\gamma}) - a_1^{1+\gamma}(b_1^{1-\gamma} - a_2^{1-\gamma}) \\
& + b(b_1^{1-\gamma} - a_1^{1-\gamma} - a_2^{1-\gamma}) - a_2^{1+\gamma}(b_1^{1-\gamma} - a_1^{1-\gamma}) \leq 0 \\
\iff\ & -a_2^{1-\gamma}b_1^{1+\gamma} - a_1^{1+\gamma}(b_1^{1-\gamma} - a_2^{1-\gamma}) + b(b_1^{1-\gamma} - a_1^{1-\gamma} - a_2^{1-\gamma}) \\
& -a_2^{1+\gamma}b_1^{1-\gamma} + a_1^{1-\gamma}(a_2^{1+\gamma} - b_1^{1+\gamma}) \leq 0,
\end{aligned}$$

and each term is non-positive.

Let $N \geq 2$. We assume that

$$\left(\sum_{i=1}^{N-1}\left(b_i^{\gamma+1} - a_i^{\gamma+1}\right) + b^{\gamma+1} - a_N^{\gamma+1}\right)\left(\sum_{i=1}^{N-1}\left(b_i^{1-\gamma} - a_i^{1-\gamma}\right) - a_N^{1-\gamma}\right) \leq \sum_{i=1}^{N-1}\left(b_i^2 + a_i^2\right) + a_N^2.$$

and we want to show that

$$\left(\sum_{i=1}^{N}\left(b_i^{\gamma+1} - a_i^{\gamma+1}\right) + b^{\gamma+1} - a_{N+1}^{\gamma+1}\right)\left(\sum_{i=1}^{N}\left(b_i^{1-\gamma} - a_i^{1-\gamma}\right) - a_{N+1}^{1-\gamma}\right) \leq \sum_{i=1}^{N}\left(b_i^2 + a_i^2\right) + a_{N+1}^2.$$

Using the induction hypothesis, it is sufficient to show that

$$\begin{aligned}
&\left(\sum_{i=1}^{N-1}\left(b_i^{\gamma+1} - a_i^{\gamma+1}\right) + b^{\gamma+1} - a_N^{\gamma+1}\right)\left(b_N^{1-\gamma} - a_{N+1}^{1-\gamma}\right) + \left(b_N^{1+\gamma} - a_{N+1}^{1+\gamma}\right) \\
&\qquad \times \left(\sum_{i=1}^{N-1}\left(b_i^{1-\gamma} - a_i^{1-\gamma}\right) - a_N^{1-\gamma} + b_N^{1-\gamma} - a_{N+1}^{1-\gamma}\right) \leq b_N^2 + a_{N+1}^2.
\end{aligned}$$

This is equivalent to

$$\begin{aligned}
&\left(\sum_{i=1}^{N-1}\left(b_i^{\gamma+1} - a_i^{\gamma+1}\right) + b^{\gamma+1} - a_N^{\gamma+1}\right)\left(b_N^{1-\gamma} - a_{N+1}^{1-\gamma}\right) + \left(b_N^{1+\gamma} - a_{N+1}^{1+\gamma}\right) \\
&\qquad \times \left(\sum_{i=1}^{N-1}\left(b_i^{1-\gamma} - a_i^{1-\gamma}\right) - a_N^{1-\gamma}\right) - b_N^{1+\gamma}a_{N+1}^{1-\gamma} - a_{N+1}^{1+\gamma}b_N^{1-\gamma} \leq 0,
\end{aligned}$$

and each term is non-positive.

Sub-case 2: The case $a \in A$.
We have seen in case 1, sub-case 2, that for t small enough

$$(V_A^\nu)''(t) = \frac{1}{\gamma}\left(\sum_{i=2}^{N}\left(b_{i-1}(t)^{1-\gamma} - a_i(t)^{1-\gamma}\right)\right).$$

This quantity is non-positive. Hence V_A^ν is concave.

It follows that V_A^ν is piecewise s-concave on $[t_1+\varepsilon, t_2]$. From Lemma 4.1.1, we deduce that V_A^ν is s-concave on $[t_1+\varepsilon, t_2]$. Hence,

$$\Phi_\varepsilon(\nu) \leq 0.$$

We conclude that $V_A^{\mu_0}$ is s-concave on $(0, t_0)$.

We have already seen the s-concavity of $V_A^{\mu_0}$ on $[t_0, +\infty)$. Once again we use Lemma 4.1.1 to conclude that $V_A^{\mu_0}$ is s-concave on $\mathbb{R}_+^*$. Finally, by the non-decreasing property of $V_A^{\mu_0}$, it follows that $V_A^{\mu_0}$ is s-concave on $\mathbb{R}_+$. □

Remark. The result holds true if we replace the Euclidean ball by arbitrary symmetric convex body of $\mathbb{R}$. But it is not necessarily true for arbitrary convex body B. For example, let $0 < s \leq \frac{1}{2}$, and consider $B = [0,1]$, $A = [0,1] \cup [2,3]$ and $\mathrm{d}\mu(x) = x^{\frac{1}{\gamma}} 1_{[0,3]}(x)\,\mathrm{d}x$, with $\gamma = \frac{s}{1-s}$. Then, μ is a s-concave measure. For $t \in [0, \frac{1}{2})$ we get

$$V_A^\mu(t) = \mu(A+tB) = \frac{\gamma}{\gamma+1}\left((1+t)^{\frac{\gamma+1}{\gamma}} + 3^{\frac{\gamma+1}{\gamma}} - 2^{\frac{\gamma+1}{\gamma}}\right).$$

Thus

$$V_A^\mu(0)(V_A^\mu)''(0) - (1-s)(V_A^\mu)'(0)^2 = \frac{1}{\gamma+1}\left(3^{\frac{\gamma+1}{\gamma}} - 2^{\frac{\gamma+1}{\gamma}}\right) > 0.$$

Hence V_A^μ is not s-concave on $\mathbb{R}_+$. For $s = 0$, the same example works. For $s < 0$, one can take $B = [-1, 0]$, $A = [0,1] \cup [2,3]$ and $\mathrm{d}\mu(x) = x^{\frac{1}{\gamma}} 1_{[a,3]}(x)\,\mathrm{d}x$, with $\gamma = \frac{s}{1-s}$ and a sufficiently small.

We can't use the geometric localization theorem for $s \in (\frac{1}{2}, 1)$, see [36]. In fact, for $s \in (\frac{1}{2}, 1)$, such concavity of the parallel μ-volume is false but under particular conditions, we can show an improvement of the concavity expected. First, let us give a counterexample in dimension 1 for $s \in (\frac{1}{2}, 1)$.

Proposition 4.1.3. *Let $s \in (\frac{1}{2}, 1)$, thus $\gamma = \frac{s}{1-s} > 1$. Let $b = 10(1 - 2^{\frac{1-\gamma}{\gamma}})^{-1}$ and μ be a measure such that $\mathrm{d}\mu(x) = x^{\frac{1}{\gamma}} 1_{[0,b]}(x)\mathrm{d}x$. We set $A = [0,1] \cup [2,b]$. Then, $t \mapsto V_A^\mu(t) = \mu(A + tB_2^1)$ is not s-concave on $\mathbb{R}_+$.*

Proof. For every $t \in [0, \frac{1}{2})$,

$$\begin{aligned} V_A^\mu(t) &= \frac{\gamma}{\gamma+1}\left((1+t)^{\frac{1+\gamma}{\gamma}} + b^{\frac{1+\gamma}{\gamma}} - (2-t)^{\frac{1+\gamma}{\gamma}}\right), \\ (V_A^\mu)'(t) &= (1+t)^{\frac{1}{\gamma}} + (2-t)^{\frac{1}{\gamma}}, \\ (V_A^\mu)''(t) &= \frac{1}{\gamma}\left((1+t)^{\frac{1-\gamma}{\gamma}} - (2-t)^{\frac{1-\gamma}{\gamma}}\right). \end{aligned}$$

Hence,

$$V_A^\mu(0)(V_A^\mu)''(0) - (1-s)(V_A^\mu)'(0)^2 = \frac{1}{\gamma+1}\left(b^{\frac{1+\gamma}{\gamma}}(1 - 2^{\frac{1-\gamma}{\gamma}}) - 2^{\frac{1-\gamma}{\gamma}} - 2^{\frac{1+2\gamma}{\gamma}}\right).$$

But $\gamma > 1$, thus $1 - 2^{\frac{1-\gamma}{\gamma}} > 0$ and since

$$b > \left(\frac{2^{\frac{1+2\gamma}{\gamma}} + 2^{\frac{1-\gamma}{\gamma}}}{1 - 2^{\frac{1-\gamma}{\gamma}}}\right)^{\frac{\gamma}{\gamma+1}}$$

it follows that

$$V_A^\mu(0)(V_A^\mu)''(0) - (1-s)(V_A^\mu)'(0)^2 > 0.$$

We conclude that V_A^μ is not s-concave on $\mathbb{R}_+$. □

We denote by $\mathrm{supp}(\mu)$ the support of μ and by $\mathrm{dist}(A, \mathrm{supp}(\mu)^c)$ the distance between A and the complement of the support of μ which equal to $+\infty$ if the support of μ is $\mathbb{R}$.

Proposition 4.1.4. *Let $s \geq \frac{1}{2}$. Let μ be a s-concave measure in $\mathbb{R}$ and A be a compact subset of $\mathbb{R}$ such that $\mathrm{dist}(A, \mathrm{supp}(\mu)^c) > 0$. Then $t \mapsto V_A^\mu(t) = \mu(A + tB_2^1)$ is concave on $[0, \mathrm{dist}(A, \mathrm{supp}(\mu)^c)]$.*

Proof. First, we assume that $s = \frac{1}{2}$. Hence μ admits a 1-concave density ψ. Then, for $t \in [0, \mathrm{dist}(A, \mathrm{supp}(\mu)^c))$ we get

$$V_A^\mu(t) = \sum_{i=1}^N \int_{a_i - t}^{b_i + t} \psi(x)\,\mathrm{d}x,$$

$$(V_A^\mu)'(t) = \sum_{i=1}^N \left(\psi(b_i + t) + \psi(a_i - t)\right).$$

Since ψ is concave, it follows that for every $i \in \{1, \dots, N\}$, the function $t \mapsto \psi(b_i + t) + \psi(a_i - t)$ is non-increasing. Thus $(V_A^\mu)'$ is non-increasing. We conclude that V_A^μ is concave on $[0, \mathrm{dist}(A, \mathrm{supp}(\mu)^c)]$.

Finally, if μ is s-concave with $s \geq \frac{1}{2}$, then μ is $\frac{1}{2}$-concave and we conclude from the first part of the proof that V_A^μ is concave on $[0, \mathrm{dist}(A, \mathrm{supp}(\mu)^c)]$. $\square$

We finish the study in dimension 1 with the 1-concave measures. We assume that μ is 1-concave. Hence,

$$\forall x \in \mathbb{R}, \quad \mathrm{d}\mu(x) = C 1_{[a,b]}(x) \mathrm{d}x$$

with $C > 0$ is a constant and $[a, b]$ an interval of $\mathbb{R}$, with $a < b$. Then it follows by a direct computation that $t \mapsto \mu(A + tB_2^1)$ is 1-concave on $\mathbb{R}_+$.

In dimension $n \geq 2$, we have seen in Proposition 2.3.3 that the Costa-Cover conjecture 2.1.1 is false, and thus even for the classical parallel volume, one can't expect such concavity in general.

This could appear surprising since we get positive results in dimension 1 with the geometric localization theorem. In general, this localization technique permits to reduce an inequality for general convex measures in n dimension to measures whose support is a segment and density is a power of an affine function (see *e.g.* [45], [34]). Let us explain why we can't exit from dimension 1 here. The reduction done in dimension 1 with localization works the same way in dimension n and we get the following equivalence for every compact set A of $\mathbb{R}^n$:
i) V_A^μ is s-concave for every μ s-concave.
ii) V_A^ν is s-concave for every ν s-affine on a segment $[a, b]$.
However, ii) is not true in dimension $n \geq 2$ since we can construct an explicit counterexample to show that in fact the function $t \mapsto |(A + tB_2^n) \cap [a, b]|_1$ is not continuous and hence not s-concave. For example, consider $A = \{(0, 0)\} \cup \{(3, 0)\} \cup \{(x, 1); x \in [1, 2]\}$ and $[a, b] = \{(x, 0); x \in [0, 3]\}$.

For the classical parallel volume, we have seen in Theorem 2.3.2 that in dimension 2 the function $t \mapsto |A + tB_2^2|$ is $\frac{1}{2}$-concave on $\mathbb{R}_+$, if A is a connected subset of $\mathbb{R}^2$. However, the next proposition shows that this is false in the general case of s-concave measures.

Proposition 4.1.5. *In dimension 2, there exists a connected set A and a $\frac{1}{2}$-concave measure μ such that $t \mapsto \mu(A + tB_2^2)$ is not $\frac{1}{2}$-concave on $\mathbb{R}_+$.*

Figure 4.1: Counterexample

Proof. We set $\mathrm{d}\mu(x) = 1_{B_1^2}(x)\mathrm{d}x$, where B_1^2 denotes the unit ball for the ℓ_1^2 norm. Hence, μ is $\frac{1}{2}$-concave. We construct the points $B = (-1, 0)$, $C = (-0.5, -0.5)$, $D = (0.5, 0.5)$, $E = (0, 1)$, $F = (-2, 0)$, $G = (0, -2)$, $H = (0, -1)$, $I = (2, 0)$, $J = (1, 0)$. We set (see Figure (4.1) above)

$$A = \mathrm{conv}(BCDE) \cup [FB] \cup [FG] \cup [GH] \cup [GI] \cup [IJ].$$

Then A is connected and for every $t \in [0, \frac{1}{8}]$, we get

$$V_A^\mu(t) = \mu(A + tB_2^2) = \frac{\sqrt{2}}{2} + \sqrt{2}t + \frac{\pi}{2}t^2.$$

It follows that

$$\left(\sqrt{V_A^\mu}\right)''(0) > 0.$$

We conclude that $t \mapsto \mu(A + tB_2^2)$ is not $\frac{1}{2}$-concave on $\mathbb{R}_+$. □

Remark. Notice that we can adapt the counterexample of Proposition 4.1.5 to show that there exists, in dimension $n \geq 2$, a s-concave measure μ such that for every $r \in (-\infty; s)$ there exists a compact connected subset A of $\mathbb{R}^n$ such that $t \mapsto \mu(A + tB_2^n)$ is not r-concave on $\mathbb{R}_+$.

4.2 On improvement of the concavity of convex measures

Recently, Gardner and Zvavitch [42] proved that the Gaussian measure γ_n in $\mathbb{R}^n$ satisfies a Brunn-Minkowski type inequality for particular sets. Namely they showed that for coordinate boxes A and B, *i.e.* a product of intervals, containing the origin in $\mathbb{R}^n$, or for A, B which are dilates of the same symmetric convex set, and for every $\lambda \in [0,1]$, one has

$$\gamma_n((1-\lambda)A + \lambda B)^{\frac{1}{n}} \geq (1-\lambda)\gamma_n(A)^{\frac{1}{n}} + \lambda\gamma_n(B)^{\frac{1}{n}}, \tag{4.4}$$

and they conjectured that inequality (4.4) holds for every $A, B \subset \mathbb{R}^n$ convex symmetric. As a consequence of the Prékopa-Leindler inequality (1.8) [70], [60], [71], the Gaussian measure satisfies for every compact sets $A, B \subset \mathbb{R}^n$ and for every $\lambda \in [0,1]$,

$$\gamma_n((1-\lambda)A + \lambda B) \geq \gamma_n(A)^{1-\lambda}\gamma_n(B)^{\lambda}. \tag{4.5}$$

Using the terminology of Borell [16] (see Chapter 1 for further details), this inequality means that the Gaussian measure is a log-concave measure. By inequality on means, inequality (4.4) is stronger than inequality (4.5), hence the results of Gardner and Zvavitch improves the concavity of the Gaussian measure by showing that this measure is $\frac{1}{n}$-concave if restricted to the particular class of sets described in inequality (4.4).

We will see that these results of Gardner and Zvavitch can be extended to the more general class of convex measures. This is the mathematical underlying idea of the Gaussian Brunn-Minkowski inequality (4.4), *i.e.* under symmetry assumptions, one can improve a certain property, here the concavity of a measure. However, we will see that symmetries are not the only hypothesis that permits to improve the concavity of a measure.

This section is devoted to study the following question:

Question 1. For which $s \in [-\infty, +\infty]$, for which class $\mathcal{M}$ of Borel measures and for which class $\mathcal{C}$ of couples of Borel subsets of $\mathbb{R}^n$ one has for every $\mu \in \mathcal{M}$, for every $(A, B) \in \mathcal{C}$ such that $\mu(A)\mu(B) > 0$ and for every $\lambda \in [0,1]$,

$$\mu((1-\lambda)A + \lambda B) \geq ((1-\lambda)\mu(A)^s + \lambda\mu(B)^s)^{\frac{1}{s}} \quad ? \tag{4.6}$$

The right-hand side of inequality (4.6) has to be interpreted by $\mu(A)^{1-\lambda}\mu(B)^{\lambda}$ for $s=0$, by $\min(\mu(A),\mu(B))$ for $s=-\infty$ and by $\max(\mu(A),\mu(B))$ for $s=+\infty$.

Borell [16] (see also [19]) proved that Question 1. has a positive answer if $\mathcal{M}$ is the class of s-concave measures in $\mathbb{R}^n$ and if $\mathcal{C}$ is the class of couples of Borel subsets of $\mathbb{R}^n$ (see Chapter 1).

If restricted to the Lebesgue measure, Question 1. has been explored for $s=1$, by Bonnesen [14], and is still studied (see *e.g.* [50]).

In the following, we study Question 1.

Preliminaries

A subset A of $\mathbb{R}^n$ is said to be *symmetric* if $A=-A$. A function $f:\mathbb{R}^n\to\mathbb{R}$ is said to be *unconditional* if there exists a basis $(a_1,\dots,a_n)$ of $\mathbb{R}^n$ such that for every $x=\sum_{i=1}^n x_i a_i\in\mathbb{R}^n$ and for every $\varepsilon=(\varepsilon_1,\dots,\varepsilon_n)\in\{-1,1\}^n$, one has $f(\sum_{i=1}^n \varepsilon_i x_i a_i)=f(x)$. A subset A of $\mathbb{R}^n$ is said to be *unconditional* if the indicator function of A, denoted by 1_A, is unconditional. A measure with density is said to be *symmetric* (resp. *unconditional*) if its density is even (resp. unconditional).

A natural generalization of convex measures are measures with $-\infty$-concave density. From the results of Borell (Theorem 1.7.1), a measure with γ-concave density where $\gamma<-\frac{1}{n}$, does not satisfied a concavity property of the form (1.23) (but satisfies another form of concavity [27]). However, we will show that if restricted to special sets, such measures are $\frac{1}{n}$-concave.

We call *sub-convex measure* a measure with $-\infty$-concave density. Notice that convex measures are sub-convex.

Brunn-Minkowski type inequality for sub-convex measures

In this section, we partially answer to Question 1. by investigating possible improvements of the concavity of sub-convex measures. Gardner and Zvavitch [42] noticed in the case of the Gaussian measure, that the position of the sets A and B plays an important role. Indeed, since for s-concave probability measures μ, with $s\le 0$, the density tends to 0 at infinity and the support of the density can be equal to $\mathbb{R}^n$, one can find sets A and

B such that A contain the origin and $\frac{A+B}{2}$ is far from the origin. Thus for $r > 0$, the inequality

$$\mu\left(\frac{A+B}{2}\right)^r \geq \frac{\mu(A)^r + \mu(B)^r}{2}$$

will not be satisfied. Hence, the position of the sets A and B is an inherent constraint of the problem. Notice also that in the definition of s-concave measures, the condition $\mu(A)\mu(B) > 0$ is already a constraint on the position of A and B with respect to the support of μ.

Notice that Question 1. has a positive answer for $s = +\infty$ if $\mathcal{M}$ is the class of convex measures and if $\mathcal{C}$ is the class of couples of Borel sets with same measure. Indeed, one then has for every $\lambda \in [0,1]$

$$\mu((1-\lambda)A + \lambda B) \geq \inf(\mu(A), \mu(B)),$$

by definition. Since $\mu(A) = \mu(B)$, it follows that

$$\mu((1-\lambda)A + \lambda B) \geq \mu(A) = \max(\mu(A), \mu(A)) = \max(\mu(A), \mu(B)).$$

Notice also that for every measure μ and for every Borel sets $A, B \subset \mathbb{R}^n$ such that $A \subset B$, one has for every $\lambda \in [0,1]$,

$$\mu((1-\lambda)A + \lambda B) \geq \min(\mu(A), \mu(B)),$$

since in this case one has, $(1-\lambda)A + \lambda B \supset (1-\lambda)A + \lambda A \supset A$.

The case of symmetric measures and symmetric sets

Under symmetry assumptions, the best concavity one can obtain is $\frac{1}{n}$ by considering for example the Lebesgue measure, which fulfils a lot of symmetries (unconditional), and two dilates of B_2^n (which are unconditional). This was noticed by Gardner and Zvavitch [42] also for the Gaussian measure.

A sufficient condition to ensure that a measure μ in $\mathbb{R}^n$ is $\frac{1}{n}$-concave in the class of dilates of a fixed Borel set $A \subset \mathbb{R}^n$ is that the function $t \mapsto \mu(tA)$ is $\frac{1}{n}$-concave. The following proposition gives a sufficient condition for this.

Proposition 4.2.1. *Let $\phi : \mathbb{R}^n \to \mathbb{R}_+$ be a measurable function such that for every $x \in \mathbb{R}^n$, the function $t \mapsto \phi(tx)$ is non-increasing on $\mathbb{R}_+$. Let μ be a measure with*

density ϕ and A be a Borel subset of $\mathbb{R}^n$ containing 0*. If the function $t \mapsto \mu(\mathrm{e}^t A)$ is* log*-concave on $\mathbb{R}$, then the function $t \mapsto \mu(tA)$ is $\frac{1}{n}$-concave on $\mathbb{R}_+$.*

Proof. Let μ be a measure with density ϕ satisfying the assumptions of Proposition 4.2.1 and let A be a Borel subset of $\mathbb{R}^n$ containing 0. Let us denote $F(t) = \mu(tA)$, for $t \in \mathbb{R}_+$. Notice that F is non-decreasing and continuous on $\mathbb{R}_+$. By assumption, the function $t \mapsto F(\mathrm{e}^t)$ is log-concave on $\mathbb{R}$. It follows that the right derivative of F, denoted by F'_+, exists everywhere and that $t \mapsto tF'_+(t)/F(t)$ is non-increasing on $(0, +\infty)$.

Notice that the function F is $\frac{1}{n}$-concave on $\mathbb{R}_+$ if and only if the function

$$t \mapsto \frac{tF'_+(t)}{F(t)} \frac{F(t)^{\frac{1}{n}}}{t}$$

is non-increasing on $\mathbb{R}_+$. A direct change of variables shows that

$$\frac{F(t)}{t^n} = \int_A \phi(tx)\,\mathrm{d}x.$$

By assumption, the function $t \mapsto \phi(tx)$ is non-increasing on $\mathbb{R}_+$. It follows that the function $t \mapsto F(t)^{\frac{1}{n}}/t$ is non-increasing on $(0, +\infty)$. Hence, the function $t \mapsto (F(t)^{\frac{1}{n}})'_+$ is non-increasing on $(0, +\infty)$ as the product of two non-negative non-decreasing functions on $(0, +\infty)$. We conclude that F is $\frac{1}{n}$-concave on $\mathbb{R}_+$. □

Remarks.

1. Proposition 4.2.1 is established in [42] for the Gaussian measure by differentiating twice.

2. The assumption $t \mapsto \phi(tx)$ *is non-increasing on* $\mathbb{R}_+$ is satisfied if ϕ is an even $-\infty$-concave function.

Proposition 4.2.1 is related to the (B)-conjecture. This conjecture was posed by W. Banaszczyk [58] and asks whether the function $t \mapsto \gamma_n(\mathrm{e}^t A)$ is log-concave on $\mathbb{R}$, for every convex symmetric set $A \subset \mathbb{R}^n$. The (B)-conjecture was proved by Cordero-Erausquin, Fradelizi and Maurey in [22]. In the same paper [22], the authors have also showed that for every unconditional log-concave measure μ and for every unconditional convex subset $A \subset \mathbb{R}^n$, the function $t \mapsto \mu(\mathrm{e}^t A)$ is log-concave on $\mathbb{R}$. Using this and the point 2. of the previous remark, we may apply Proposition 4.2.1 to get the following corollary:

Corollary 4.2.2. *Let μ be an unconditional* log*-concave measure and let A be an unconditional convex subset of $\mathbb{R}^n$. Then, the measure μ is $\frac{1}{n}$-concave in the class of dilates of A. More precisely, for every $A_1, A_2 \in \{\alpha A; \alpha > 0\}$ and for every $\lambda \in [0,1]$, we get*

$$\mu((1-\lambda)A_1 + \lambda A_2)^{\frac{1}{n}} \geq (1-\lambda)\mu(A_1)^{\frac{1}{n}} + \lambda\mu(A_2)^{\frac{1}{n}}.$$

Remark. Very recently, Livne Bar-on [61] and Saroglou [74] proved, using different methods, that in dimension 2 for the uniform measure μ_K on a symmetric convex set $K \subset \mathbb{R}^2$, the function $t \mapsto \mu_K(\mathrm{e}^t A)$ is log-concave on $\mathbb{R}$ for every symmetric convex set $A \subset \mathbb{R}^2$. However, for our problem, this information is not useful since the uniform measure on a convex subset of $\mathbb{R}^n$ is a $\frac{1}{n}$-concave measure.

A natural question is to ask if the role of the symmetry can be relaxed. Initially, Question 1. was posed for the Gaussian measure [42]. Even restricted to this measure, it has been shown by Nayar and Tkocz in [67], that for the Gaussian measure in dimension 2 there exists non-symmetric convex sets A and B in $\mathbb{R}^2$ satisfying $0 \in A \subset B$ and such that

$$\gamma_2\left(\frac{A+B}{2}\right)^{\frac{1}{2}} < \frac{\gamma_2(A)^{\frac{1}{2}} + \gamma_2(B)^{\frac{1}{2}}}{2}. \tag{4.7}$$

It is then direct to construct explicit counter-example in every dimension $n \geq 2$. Moreover, the counterexample in [67] shows more than inequality (4.7). It shows that

$$\gamma_2\left(\frac{A+B}{2}\right)^{s} < \frac{\gamma_2(A)^{s} + \gamma_2(B)^{s}}{2}, \tag{4.8}$$

for every $s \geq 1 - \frac{2}{\pi}$. However, it could be interesting to know what happens for $s \in (0, 1 - \frac{2}{\pi})$.

Notice that the same counterexample with the following log-concave unconditional measure instead of the Gaussian measure

$$\mathrm{d}\mu(x,y) = \mathrm{e}^{-|x|}\mathrm{e}^{-|y|}\,\mathrm{d}x\,\mathrm{d}y, \quad (x,y) \in \mathbb{R}^2$$

satisfies inequality (4.8) for every $s > 0$.

Thus, in general, the symmetry assumption on the measure is not sufficient.

On the other hand, the concavity of a non-symmetric convex measure cannot be improved in general in the class of symmetric sets even in dimension 1:

Proposition 4.2.3. *Let $0 < s < 1$ and $r > s$. There exists a s-concave measure μ in $\mathbb{R}$ and symmetric sets $A, B \subset \mathbb{R}$ such that*

$$\mu\left(\frac{A+B}{2}\right) < \left(\frac{\mu(A)^r + \mu(B)^r}{2}\right)^{\frac{1}{r}}.$$

Proof. Let us define $\mathrm{d}\mu(x) = x^{1/\gamma} 1_{\mathbb{R}_+}(x)\,\mathrm{d}x$, with $\gamma = \frac{s}{1-s} > 0$. Let us consider the sets $A = [-a, a]$ and $B = [-b, b]$ with $0 < a < b$. Notice that

$$\lim_{a\to 0} \mu\left(\frac{A+B}{2}\right) = \mu\left(\frac{B}{2}\right) = \frac{\mu(B)}{2^{\frac{1}{s}}} = \lim_{a\to 0}\left(\frac{\mu(A)^s + \mu(B)^s}{2}\right)^{\frac{1}{s}}.$$

Since $\mu(A) \neq \mu(B)$, it follows from inequalities on means that

$$\left(\frac{\mu(A)^s + \mu(B)^s}{2}\right)^{\frac{1}{s}} < \left(\frac{\mu(A)^r + \mu(B)^r}{2}\right)^{\frac{1}{r}}.$$

we conclude that for a sufficiently small,

$$\mu\left(\frac{A+B}{2}\right) < \left(\frac{\mu(A)^r + \mu(B)^r}{2}\right)^{\frac{1}{r}}.$$

□

Thus, in general, the symmetry assumption on the sets is not sufficient.

The case of sets with a maximal section of equal measure

In this section, we consider $\mathcal{C}$ to be the class of couples of Borel subsets of $\mathbb{R}^n$ having in a direction, a maximal section of equal measure. A famous result of Bonnesen [14] (for convex sets) states that if $A, B \subset \mathbb{R}^n$ satisfy

$$\sup_{t\in\mathbb{R}} |A \cap (u^\perp + tu)|_{n-1} = \sup_{t\in\mathbb{R}} |B \cap (u^\perp + tu)|_{n-1},$$

where $|\cdot|_{n-1}$ denotes the $(n-1)$-dimensional Lebesgue measure, then for every $\lambda \in [0, 1]$, one has

$$|(1-\lambda)A + \lambda B| \geq (1-\lambda)|A| + \lambda|B|.$$

This result of Bonnesen can be extended to more general measures than the Lebesgue measure as a direct consequence of a functional version established by Henstock and Macbeath in dimension 1 (see Proposition 4.2.4 below) and later on by Dancs and Uhrin in higher dimension (see Proposition 4.2.8 below).

Proposition 4.2.4 (Henstock, Macbeath [49])**.** *Let $\lambda \in [0,1]$. Let $f, g, h : \mathbb{R} \to \mathbb{R}_+$ be non-negative measurable functions such that $\max(f) = \max(g)$ and such that for every $x, y \in \mathbb{R}$*

$$h((1-\lambda)x + \lambda y) \geq \min(f(x), g(y)).$$

Then, one has

$$\int_{\mathbb{R}} h(x)\,\mathrm{d}x \geq (1-\lambda)\int_{\mathbb{R}} f(x)\,\mathrm{d}x + \lambda \int_{\mathbb{R}} g(x)\,\mathrm{d}x.$$

We deduce the following result:

Proposition 4.2.5. *Let $\phi : \mathbb{R} \to \mathbb{R}_+$ be a $-\infty$-concave function such that $\max(\phi)$ is attained in $a \in \mathbb{R}$. Let μ be a measure with density ϕ. Let A, B be Borel subsets of $\mathbb{R}$ such that $a \in A \cap B$. Then, for every $\lambda \in [0,1]$, we have*

$$\mu((1-\lambda)A + \lambda B) \geq (1-\lambda)\mu(A) + \lambda\mu(B).$$

Proof. Let $\lambda \in [0,1]$. We define, for every $x \in \mathbb{R}$, $h(x) = \phi(x)1_{(1-\lambda)A+\lambda B}(x)$, $f(x) = \phi(x)1_A(x)$, $g(x) = \phi(x)1_B(x)$. Notice that for every $x, y \in \mathbb{R}$ one has

$$h((1-\lambda)x + \lambda y) \geq \min(f(x), g(y)),$$

and $\max(f) = \max(g) = \phi(a)$. It follows from Proposition 4.2.4 that

$$\int_{\mathbb{R}} h(x)\,\mathrm{d}x \geq (1-\lambda)\int_{\mathbb{R}} f(x)\,\mathrm{d}x + \lambda \int_{\mathbb{R}} g(x)\,\mathrm{d}x.$$

In other words, we get

$$\mu((1-\lambda)A + \lambda B) \geq (1-\lambda)\mu(A) + \lambda\mu(B).$$

□

Remark. Proposition 4.2.5 was established in [42] in the particular case where μ is the Gaussian measure and where $A, B \subset \mathbb{R}$ are convex. In the same paper, the authors were

able to remove the convexity assumption for only one set, by using long computations and they did not know whether one can remove the convexity assumption on the second set. Our method bypass the use of geometric tools and relies on the functional version Proposition 4.2.4.

Conversely, if a measure μ in $\mathbb{R}$, admitting a density ϕ with respect to the Lebesgue measure, satisfies

$$\mu((1-\lambda)A+\lambda B) \geq (1-\lambda)\mu(A)+\lambda\mu(B),$$

for every $\lambda \in [0,1]$ and for every symmetric convex sets $A, B \subset \mathbb{R}$, then one has for every $\lambda \in [0,1]$ and for every $a, b \in \mathbb{R}_+$,

$$\int_{-((1-\lambda)a+\lambda b)}^{(1-\lambda)a+\lambda b} \phi(x)\,\mathrm{d}x \geq (1-\lambda)\int_{-a}^{a}\phi(x)\,\mathrm{d}x + \lambda\int_{-b}^{b}\phi(x)\,\mathrm{d}x.$$

It follows that the function $t \mapsto \phi(t)+\phi(-t)$ is non-increasing on $\mathbb{R}_+$. Notice that this condition is satisfied for more general functions than $-\infty$-concave functions attaining the maximum at 0.

However, one can see with the same argument that if one assume $A, B \subset \mathbb{R}$ convex containing 0 (not necessarily symmetric), then it follows that the density ϕ is necessarily non-decreasing on $(-\infty; 0]$ and non-increasing on $[0; +\infty)$. Notice that this is equivalent to the fact that the density ϕ is $-\infty$-concave and $\max(\phi)$ is attained at 0.

By tensorization, Proposition 4.2.5 leads to the following corollary:

Corollary 4.2.6. *Let μ_i, $1 \leq i \leq n$, be measures with densities $\phi_i : \mathbb{R} \to \mathbb{R}_+$ such that ϕ_i are non-decreasing on $(-\infty; 0]$ and non-increasing on $[0; +\infty)$. Let μ be the product measure of $\mu_1, \ldots, \mu_n$ and let $A, B \subset \mathbb{R}^n$ be the product of n Borel subsets of $\mathbb{R}$ such that $0 \in A \cap B$. Then, for every $\lambda \in [0,1]$, we have*

$$\mu((1-\lambda)A+\lambda B)^{\frac{1}{n}} \geq (1-\lambda)\mu(A)^{\frac{1}{n}} + \lambda\mu(B)^{\frac{1}{n}}.$$

Proof. We follow [42]. By assumption, $A = \Pi_{i=1}^n A_i$ and $B = \Pi_{i=1}^n B_i$, where for every $i \in \{1, \ldots, n\}$, A_i and B_i are Borel subsets of $\mathbb{R}$ containing 0. Let $\lambda \in [0,1]$. Notice that

$$(1-\lambda)A+\lambda B = \Pi_{i=1}^n((1-\lambda)A_i+\lambda B_i).$$

Using Proposition 4.2.5 and an inequality of Minkowski (see *e.g.* [47]), one deduces that

$$\begin{aligned}
\mu((1-\lambda)A+\lambda B)^{\frac{1}{n}} &= (\Pi_{i=1}^n \mu_i((1-\lambda)A_i+\lambda B_i))^{\frac{1}{n}} \\
&\geq (\Pi_{i=1}^n ((1-\lambda)\mu_i(A_i)+\lambda\mu_i(B_i)))^{\frac{1}{n}} \\
&\geq (\Pi_{i=1}^n (1-\lambda)\mu_i(A_i))^{\frac{1}{n}} + (\Pi_{i=1}^n \lambda\mu_i(B_i))^{\frac{1}{n}} \\
&= (1-\lambda)\mu(A)^{\frac{1}{n}} + \lambda\mu(B)^{\frac{1}{n}}.
\end{aligned}$$

□

Another consequence of Proposition 4.2.5 is that some particular product measures are concave measures if one set is a union of slabs containing the origin.

Corollary 4.2.7. *Let μ_1 be a measure with density $\phi : \mathbb{R} \to \mathbb{R}_+$, such that ϕ is non-decreasing on $(-\infty; 0]$ and non-increasing on $[0; +\infty)$. Let μ_2 be a $(n-1)$-dimensional measure and let μ be the product measure of μ_1 and μ_2. Let $A = A_1 \times \mathbb{R}^{n-1}$, where A_1 is a Borel subset of $\mathbb{R}$ and let B be a Borel subset of $\mathbb{R}^n$ such that $0 \in A \cap B$. Then, for every $\lambda \in [0,1]$, we have*

$$\mu((1-\lambda)A+\lambda B) \geq (1-\lambda)\mu(A)+\lambda\mu(B).$$

Corollary 4.2.7 was established in [42] in the particular case where μ is the Gaussian measure and where one set is convex and with the weaker conclusion that the measure is $\frac{1}{n}$-concave.

Proof. We follow [42]. Let us denote $B_S = \mathrm{P}_{e_1}(B) \times \mathbb{R}^{n-1}$, where $\mathrm{P}_{e_1}(B)$ denotes the orthogonal projection of B on the first coordinate axis. Then, for every $\lambda \in [0,1)$, one has

$$(1-\lambda)A+\lambda B = (1-\lambda)A+\lambda B_S.$$

It follows, using Proposition 4.2.5, that

$$\begin{aligned}
\mu((1-\lambda)A+\lambda B) &= \mu((1-\lambda)A+\lambda B_S) \\
&= \mu(((1-\lambda)A_1+\lambda \mathrm{P}_{e_1}(B)) \times \mathbb{R}^{n-1}) \\
&= \mu_1((1-\lambda)A_1+\lambda \mathrm{P}_{e_1}(B)) \cdot \mu_2(\mathbb{R}^{n-1}) \\
&\geq ((1-\lambda)\mu_1(A_1)+\lambda\mu_1(\mathrm{P}_{e_1}(B))) \cdot \mu_2(\mathbb{R}^{n-1}) \\
&= (1-\lambda)\mu(A)+\lambda\mu(B_S) \\
&\geq (1-\lambda)\mu(A)+\lambda\mu(B).
\end{aligned}$$

□

On the other hand, Proposition 4.2.4 can be turned in dimension n. First, let us define for a non-negative measurable function $f : \mathbb{R}^n \to \mathbb{R}_+$ and for $u \in \mathcal{S}^{n-1}$,

$$m_u(f) = \sup_{t\in\mathbb{R}} \int_{u^\perp} f(x+tu)\,\mathrm{d}x.$$

Proposition 4.2.8 (Dancs, Uhrin [27]). *Let $-\frac{1}{n-1} \leq \gamma \leq +\infty$, $\lambda \in [0,1]$ and $f, g, h : \mathbb{R}^n \to \mathbb{R}_+$ be non-negative measurable functions such that for every $x, y \in \mathbb{R}^n$,*

$$h((1-\lambda)x + \lambda y) \geq ((1-\lambda)f(x)^\gamma + \lambda g(y)^\gamma)^{\frac{1}{\gamma}}.$$

If there exists $u \in \mathcal{S}^{n-1}$ such that $m_u(f) = m_u(g) < +\infty$, then

$$\int_{\mathbb{R}^n} h(x)\,\mathrm{d}x \geq (1-\lambda)\int_{\mathbb{R}^n} f(x)\,\mathrm{d}x + \lambda \int_{\mathbb{R}^n} g(x)\,\mathrm{d}x.$$

We deduce the following result. First, let us denote for a measure μ with density ϕ, for a Borel subset $A \subset \mathbb{R}^n$ and for a hyperplane $H \subset \mathbb{R}^n$,

$$\mu_{n-1}(A \cap H) = \int_{A\cap H} \phi(x)\,\mathrm{d}x.$$

Proposition 4.2.9. *Let μ be a measure with density $\phi : \mathbb{R}^n \to \mathbb{R}_+$ such that ϕ is $-\frac{1}{n-1}$-concave. Let A, B be Borel subsets of $\mathbb{R}^n$. If there exists $u \in \mathcal{S}^{n-1}$ such that*

$$\sup_{t\in\mathbb{R}} \mu_{n-1}(A \cap (u^\perp + tu)) = \sup_{t\in\mathbb{R}} \mu_{n-1}(B \cap (u^\perp + tu)),$$

then, for every $\lambda \in [0,1]$, we have

$$\mu((1-\lambda)A + \lambda B) \geq (1-\lambda)\mu(A) + \lambda\mu(B).$$

Proof. Let $\lambda \in [0,1]$. Let us take $f = \phi 1_A$, $g = \phi 1_B$ and $h = \phi 1_{(1-\lambda)A+\lambda B}$. Then, for every $x, y \in \mathbb{R}^n$, one has

$$h((1-\lambda)x + \lambda y) \geq ((1-\lambda)f(x)^\gamma + \lambda g(y)^\gamma)^{\frac{1}{\gamma}},$$

where $\gamma = -\frac{1}{n-1}$. Moreover,

$$\int_{u^\perp} f(x+tu)\,\mathrm{d}x = \int_{A\cap(u^\perp+tu)} \phi(x)\,\mathrm{d}x = \mu_{n-1}(A\cap(u^\perp+tu)).$$

It follows that $m_u(f) = m_u(g)$. From Proposition 4.2.8, we get that

$$\mu((1-\lambda)A+\lambda B) \geq (1-\lambda)\mu(A)+\lambda\mu(B).$$

□

Application to the parallel volume

Let us see how improvements of the concavity of sub-convex measures can improve the concavity of a generalized form of the parallel volume. The parallel volume of a measurable subset A of $\mathbb{R}^n$, namely the function $t \mapsto |A+tB_2^n|$, is a particularly interesting functional in geometry, which has been highlighted by the precursor works of Steiner in [81]. Even nowadays, the parallel volume and its generalized forms are still studied (see *e.g.* [52], [55]). Moreover, this notion of parallel volume leads to the powerful theory of mixed volumes (see [77] for further details).

As a consequence of the Brunn-Minkowski inequality (1.7), one can see that if $A \subset \mathbb{R}^n$ is convex, then the parallel volume of A is $\frac{1}{n}$-concave on $\mathbb{R}_+$. More generally, if a measure μ is s-concave, with $s \in [-\infty;+\infty]$, in the class of sets of the form $\{A+tB; t\in\mathbb{R}_+\}$, where A and B are convex subsets of $\mathbb{R}^n$, then the generalized parallel volume $t \mapsto \mu(A+tB)$ is s-concave on $\mathbb{R}_+$. Indeed, for every $t_1, t_2 \in \mathbb{R}_+$ and for every $\lambda \in [0,1]$, one gets

$$\begin{aligned}\mu(A+((1-\lambda)t_1+\lambda t_2)B) &= \mu((1-\lambda)(A+t_1B)+\lambda(A+t_2B)) \\ &\geq ((1-\lambda)\mu(A+t_1B)^s+\lambda\mu(A+t_2B)^s)^{\frac{1}{s}}.\end{aligned}$$

Using this and Corollary 4.2.6, we get the following corollary:

Corollary 4.2.10. *Let μ_i, $1\leq i\leq n$, be measures with densities $\phi_i : \mathbb{R}\to\mathbb{R}_+$ such that ϕ_i are non-decreasing on $(-\infty;0]$ and non-increasing on $[0;+\infty)$. Let μ be the product measure of $\mu_1,\dots,\mu_n$ and let $A, B \subset \mathbb{R}^n$ be coordinate boxes containing the origin. Then the function $t\mapsto\mu(A+tB)$ is $\frac{1}{n}$-concave on $\mathbb{R}_+$.*

In the case of non-convex sets, this property of concavity is no more true in general, even for the classical parallel volume $|A + tB_2^n|$ as seen in Chapter 2.

Bibliography

[1] L. Ambrosio, A. Colesanti, E. Villa, *Outer Minkowski content for some classes of closed set*, Math. Ann. 342 (2008) no. 4, 727-748

[2] C. Ané, S. Blachère, D. Chafaï, P. Fougères, I. Gentil, F. Malrieu, C. Roberto, G. Scheffer, with a preface by D. Bakry, and M. Ledoux, *Sur les inégalités de Sobolev logarithmiques*, (in French), Panoramas et Synthèses 10, Société Mathématique de France (SMF), Paris, 2000

[3] S. Artstein, B. Klartag, V. Milman, *The Santalò point of a function and a functional form of Santalò inequality*, Mathematika 51, 33-48 (2004) Panoramas et Synthèses 10, Société Mathématique de France (SMF), (2000)

[4] K. Ball, *Isometric problems in ℓ_p and sections of convex sets*, PhD Dissertation, Cambridge (1986)

[5] F. Barthe, *On a reverse form of the Brascamp-Lieb inequality*, (English summary) Invent. Math. 134 (1998), no. 2, 335-361

[6] W. Beckner, *Inequalities in Fourier analysis on $\mathbb{R}^n$*, Proc. Nat. Acad. Sci. U.S.A. 72 (1975), 638-641

[7] N. M. Blachman, *The convolution inequality for entropy powers*, IEEE Trans. Information theory IT-11 (1965), p. 267-271. 41, 57

[8] S. G. Bobkov, *Isoperimetric and analytic inequalities for log-concave probability measures*, Ann. Probab. 27 (1999), no. 4, 1903-1921

[9] S. G. Bobkov, I. Gentil, M. Ledoux, *Hypercontractivity of Hamilton-Jacobi equations*, J. Math. Pures Appl. (9) 80 (2001), no. 7, 669-696

[10] S. G. Bobkov, M. Ledoux, *From Brunn-Minkowski to Brascamp-Lieb and to logarithmic Sobolev inequalities*, Geom. Funct. Anal. 10 (2000), no. 5, 1028-1052

[11] S. G. Bobkov, M. Ledoux, *From Brunn-Minkowski to sharp Sobolev inequalities*, Ann. Mat. Pura Appl. (4) 187 (2008), no. 3, 369-384

[12] S. G. Bobkov, M. Ledoux, *Weighted Poincaré-type inequalities for Cauchy and other convex measures*, Ann. Probab. 37 (2009), no. 2, 403-427

[13] S. G. Bobkov, M. Madiman, *Reverse Brunn-Minkowski and reverse entropy power inequalities for convex measures*, J. Funct. Anal. 262 (2012) no. 7, 3309-3339

[14] T. Bonnesen, W. Fenchel, *Theorie der konvexen Körper*, Springer, Berlin, 1934. English translation: *Theory of Convex bodies*, edited by L. Boron, C. Christenson and B. Smith. BCS Associates, Moscow, ID, 1987

[15] C. Borell, *Convex measures on locally convex spaces*, Ark.Mat. 12 (1974), 239-252

[16] C. Borell, *Convex set functions in d-space*, Periodica Mathematica Hungarica Vol. 6, 111-136, 1975

[17] C. Borell, *The Brunn-Minkowski inequality in Gauss space*, Invent. Math. 30 (1975), no. 2, 207-216

[18] H. J. Brascamp, E. H. Lieb, *Best constants in Young's inequality, its converse, and its generalization to more than three functions*, Advances in Math. 20 (1976), no. 2, 151-173

[19] H. J. Brascamp, E. H. Lieb, *On extensions of the Brunn-Minkowski and Prékopa-Leindler theorems, including inequalities for log concave functions, and with an application to the diffusion equation*, (1976) J. Funct. Anal. 22 366-389

[20] H. Brunn, *Über Ovale und Eiflächen*, Inaugural Dissertation, München, 1887

[21] A. Cianchi, N. Fusco, F. Maggi, A. Pratelli, *On the isoperimetric deficit in Gauss space*, Amer. J. Math. 133 (2011), no. 1, 131-186

[22] D. Cordero-Erausquin, M. Fradelizi, B. Maurey, *The (B) conjecture for the Gaussian measure of dilates of symmetric convex sets and related problems*, J. Funct. Anal. 214 (2004), no. 2, 410-427

[23] D. Cordero-Erausquin, B. Klartag, *Interpolations, convexity and geometric inequalities*, Geometric aspects of functional analysis, 151-168, Lecture Notes in Math., 2050, Springer, Heidelberg, 2012

[24] M. Costa, *A new entropy power inequality*, IEEE Trans. Inform. Theory 31 (1985) 751-760

[25] M. Costa, T. M. Cover, *On the similarity of the entropy power inequality and the Brunn-Minkowski inequality*, IEEE Trans. Inform. Theory 30 (1984), no. 6, 837-839

[26] T. M. Cover, J. A. Thomas, *Elements of Information theory*, Wiley Series in Telecommunications. A Wiley-Interscience Publication. John Wiley & Sons, Inc., New York, 1991. xxiv+542 pp. ISBN: 0-471-06259-6

[27] S. Dancs, B. Uhrin, *On a class of integral inequalities and their measure-theoretic consequences*, J. Math. Anal. Appl. 74 (1980), no. 2, 388-400

[28] Y. De Castro, *Quantitative isoperimetric inequalities on the real line*, Ann. Math. Blaise Pascal 18 (2011), no. 2, 251-271

[29] A. Dembo, *Information inequalities and uncertainty principles*, Tech. Rep., Dept. of Statist., Stanford Univ.,Stanford, CA, 1990

[30] A. Dembo, T. M. Cover, J. A. Thomas, *Information theoretic inequalities*, IEEE Trans. Inform. Theory 37 (1991), no. 6, 1501-1518

[31] L. C. Evans, *Partial differential equations*, Graduate Studies in Mathematics, 19. American Mathematical Society, Providence, RI, 1998. xviii+662 pp

[32] H. Federer, *Geometric Measure Theory*, Springer, Berlin, 1969

[33] F. Fiala, *Le problème des isopérimètres sur les surfaces ouvertes à courbure positive*, (French) Comment. Math. Helv. 13 (1941) 293-346

[34] M. Fradelizi, *Concentration inequalities for s-concave measures of dilations of Borel sets and applications*, Electron. J. Probab. 14 (2009), no. 71, 2068-2090

[35] M. Fradelizi, A. Giannopoulos, M. Meyer, *Some inequalities about mixed volumes*, Israel J. Math. 135 (2003), 157-179

[36] M. Fradelizi, O. Guédon, *The extreme points of subsets of s-concave probabilities and a geometric localization theorem*, Discrete Comput. Geom. 31 (2004), no. 2, 327-335

[37] M. Fradelizi, O. Guédon, *A generalized localization theorem and geometric inequalities for convex bodies*, Adv. Math. 204 (2006), no. 2, 509-529

[38] M. Fradelizi, A. Marsiglietti, *On the analogue of the concavity of entropy power in the Brunn-Minkowski theory*, To appear in Advances in Applied Mathematics

[39] M. Fradelizi, M. Meyer, *Some functional forms of Blaschke-Santalò inequality*, Math. Z. 256 (2007), no. 2, 379-395

[40] M. Fradelizi, M. Meyer, *Functional inequalities related to Mahler's conjecture*, Monatsh. Math. 159 (2010), no. 1-2, 13-25

[41] R. J. Gardner, *The Brunn-Minkowski inequality*, Bull. Amer. Math. Soc. (N.S.) 39 (2002), no. 3, 355-405

[42] R. J. Gardner, A. Zvavitch, *Gaussian Brunn-Minkowski inequalities*, Trans. Amer. Math. Soc. 362 (2010), no. 10, 5333-5353

[43] I. Gorbovickis, *The strict Kneser-Poulsen conjecture for large radii*, Geom. Dedicata vol. 162 no. 1 (2013) 95-107

[44] N. Gozlan, C. Roberto, P-M. Samson, *Hamilton Jacobi equations on metric spaces and transport-entropy inequalities*, Revista Matematica Iberoamericana, 30 (2014), no. 1, 133-163

[45] O. Guédon, *Kahane-Khinchine type inequalities for negative exponent*, Mathematika 46 (1999), no. 1, 165-173

[46] O. Guleryuz, E. Lutwak, D. Yang, G. Zhang, *Information-theoretic inequalities for contoured probability distributions*, IEEE Trans. Inform. Theory 48 (2002) no. 8, 2377-2383

[47] G. H. Hardy, J. E. Littlewood, G. Pólya, *Inequalities*, Cambridge University Press, Cambridge, 1959

[48] R. V. L. Hartley, *Transmission of Information*, Bell System Technical Journal, July 1928, pp. 535-563

[49] R. Henstock, A. M. Macbeath, *On the measure of sum-sets. I. The theorems of Brunn, Minkowski, and Lusternik*, Proc. London Math. Soc. (3) 3, (1953). 182-194

[50] M. A. Hernández Cifre, J. Yepes Nicolás, *Refinements of the Brunn-Minkowski inequality*, J. Convex Anal. 21 (3) (2014), 1-17

[51] O. Hölder, *Ueber einen Mittelwerthssatz*, Nachrichten von der Königl. Gesellschaft der Wissenschaften und der Georg-Augusts-Universität zu Göttingen, 1889, 38-47

[52] D. Hug, G. Last, W. Weil, *A local Steiner-type formula for general closed sets and applications*, Math. Z. 246 (2004), no. 1-2, 237-272

[53] O. Johnson, *Information theory and the Central Limit Theorem*, Imperial College Press, London, 2004

[54] J. Kampf, *The parallel volume at large distances*, Geom. Dedicata, 160 (2012) 47-70

[55] J. Kampf, *Asymptotic order of the parallel volume difference*, WiMa Report 139. TU Kaiserslautern, preprint

[56] J. Kampf, M. Kiderlen *Large parallel volumes of finite and compact sets in d-dimensional Euclidean space*, Doc. Math. 18 (2013), 275-295

[57] R. Kannan, L. Lovász, M. Simonovits, *Isoperimetric problems for convex bodies and a localization lemma*, (English summary) Discrete Comput. Geom. 13 (1995), no. 3-4, 541-559

[58] R. Latała, *On some inequalities for Gaussian measures*, (English summary) Proceedings of the International Congress of Mathematicians, Vol. II (Beijing, 2002), 813-822, Higher Ed. Press, Beijing, 2002

[59] J. Lehec, *A direct proof of the functional Santalò inequality*, C. R. Math. Acad. Sci. Paris 347 (2009), no. 1-2, 55-58

[60] L. Leindler, *On a certain converse of Hölder's inequality*, II, Acta Sci. Math., 33 (1972), 217-223

[61] A. Livne Bar-on, *The (B) conjecture for uniform measures in the plane*, preprint, arXiv:1311.6584 [math.FA]

[62] L. Lovász, M. Simonovits, *Random walks in a convex body and an improved volume algorithm*, Random Structures Algorithms 4 (1993), no. 4, 359-412

[63] L. A. Lusternik, *Die Brunn-Minkowskische Ungleichnung für beliebige messbare Mengen*, Comptes Rendus (Doklady) de l'académie des Sciences de l'URSS (Nouvelle Série) III: 55-58, 1935

[64] A. Marsiglietti, *Concavity properties of extensions of the parallel volume*, submitted

[65] A. Marsiglietti, *On improvement of the concavity of convex measures*, submitted

[66] H. Minkowski, *Geometrie der Zahlen*, Leipzig, Teubner, 1896

[67] P. Nayar, T. Tkocz, *A note on a Brunn-Minkowski inequality for the Gaussian measure*, Proc. Amer. Math. Soc. 141 (2013), no. 11, 4027-4030

[68] V. H. Nguyen, *Dimensional variance inequalities of Brascamp-Lieb type and a local approach to dimensional Prékopa's theorem*, J. Funct. Anal. 266 (2014), no. 2, 931-955

[69] H. Nyquist, *Certain topics in telegraph transmission theory*, Trans. AIEE, vol. 47, pp. 617-644, Apr. 1928

[70] A. Prékopa, *Logarithmic concave measures with application to stochastic programming*, Acta Sci. Math., 32 (1971), 301-316

[71] A. Prékopa, *On logarithmic concave measures and functions*, Acta Sci. Math. (Szeged) 34 (1973), 335-343

[72] J. Rataj, V. Schmidt, E. Spodarev, *On the expected surface area of the Wiener sausage*, Math. Nachr. 282 (2009), no. 4, 591-603

[73] L. J. Rogers, *An extension of a certain theorem in inequalities*, The Messenger of Mathematics, Vol. xvii no. 10. (1888), 145-150

[74] C. Saroglou, *Remarks on the conjectured log-Brunn-Minkowski inequality*, preprint, arXiv:1311.4954 [math.FA]

[75] G. Savaré, G. Toscani, *The concavity of Rènyi entropy power*, IEEE Transactions on Information theory (in press) (2014)

[76] R. Schneider, *A measure of convexity for compact sets*, Pacific J. Math. 58 (1975), no. 2, 617-625

[77] R. Schneider, *Convex bodies : the Brunn-Minkowski theory*, Encyclopedia of mathematics and its applications 44, Cambridge University Press, Cambridge, 1993

[78] C. E. Shannon, *A mathematical theory of communication*, Bell System Tech. J. 27, (1948). 379-423, 623-656

[79] L. Stachó, *On the volume function of parallel sets*, Acta Sci. Math. 38 (1976), no. 3-4, 365-374

[80] A. Stam, *Some inequalities satisfied by the quantities of information of Fisher and Shannon*, Information and Control 2 (1959), p. 101-112

[81] J. Steiner, *Über parallele Flächen*, Monatsbericht der Akademie der Wissenschaften zu Berlin (1840), pp. 114-118

[82] V. N. Sudakov, B. S. Cirel'son, *Extremal properties of half-spaces for spherically invariant measures* (Russian) Problems in the theory of probability distributions, II. Zap. Naučn. Sem. Leningrad. Otdel. Mat. Inst. Steklov. (LOMI) 41 (1974), 14-24, 165

[83] C. Villani, *A short proof of the "concavity of entropy power"*, IEEE Trans. Inform. Theory 46 (2000) no. 4, 1695-1696

[84] W. H. Young, *On the Determination of the Summability of a Function by Means of its Fourier Constants*, Proc. London Math. Soc. (1913) S2-12 no. 1, 71

Dictionary

The Brunn-Minkowski theory

Definition 4.2.11 (γ-concave function)**.** *Let $\gamma \in \mathbb{R}$ and $f : \mathbb{R}^n \to \mathbb{R}_+$ be a non-negative function. One says that f is γ-concave if for every $\lambda \in [0,1]$ and for every compact sets $x, y \in \mathbb{R}^n$ such that $f(x)f(y) > 0$, one has*

$$f((1-\lambda)x + \lambda y) \geq ((1-\lambda)f(x)^\gamma + \lambda f(y)^\gamma)^{\frac{1}{\gamma}} .$$

The limit cases are interpreted by continuity, i.e. the right-hand side of this inequality is equal to $f(x)^{1-\lambda}g(y)^\lambda$ for $s = 0$, to $\min(f(x), g(y))$ for $s = -\infty$ and to $\max(f(x), g(y))$ for $s = +\infty$. Notice that a 1-concave function is concave on its support, that a $-\infty$-concave function has its level sets $\{x; f(x) \geq t\}$ convex, and that a $+\infty$-concave function is constant on its support.

Definition 4.2.12 (s-concave measure)**.** *Let $s \in \mathbb{R}$ and μ be a non-negative measure. One says that μ is s-concave if for every $\lambda \in [0,1]$ and for every compact sets $A, B \subset \mathbb{R}^n$ such that $\mu(A)\mu(B) > 0$, one has*

$$\mu((1-\lambda)A + \lambda B) \geq ((1-\lambda)\mu(A)^s + \lambda\mu(B)^s)^{\frac{1}{s}} .$$

The limit cases are interpreted by continuity, i.e. the right-hand side of this inequality is equal to $\mu(A)^{1-\lambda}\mu(B)^\lambda$ for $s = 0$, which corresponds to log-concave measures, to $\min(\mu(A), \mu(B))$ for $s = -\infty$ and to $\max(\mu(A), \mu(B))$ for $s = +\infty$.

Definition 4.2.13 (Cone)**.** *A set A is a cone if for every $x \in A$ and every $\lambda \geq 0$, then $\lambda x \in A$.*

Definition 4.2.14 (Convex body)**.** *A set K is a convex body if K is a compact convex set with non-empty interior.*

Definition 4.2.15 (Convex combination). *A point $x \in \mathbb{R}^n$ is a convex combination of $x_1, \ldots, x_k \in \mathbb{R}^n$ if there exists non-negative real $\lambda_1, \ldots, \lambda_k$ such that $\sum_{i=1}^k \lambda_i = 1$ and $x = \sum_{i=1}^k \lambda_i x_i$.*

Definition 4.2.16 (Convex hull). *Let A be a subset of $\mathbb{R}^n$. The convex hull of A is the set of all convex combination of point of A. It is also the intersection of all convex containing A. It is also the smallest convex set containing A.*

Definition 4.2.17 (Convex set). *A set C is convex if for every $x, y \in C$ and for every $\lambda \in [0, 1]$, then $(1 - \lambda)x + \lambda y \in C$.*

Definition 4.2.18 (Dilation). *Let A be a subset of $\mathbb{R}^n$ and $\lambda \in \mathbb{R}$. The dilation of A by λ is*

$$\lambda A = \{\lambda a; a \in A\}.$$

Definition 4.2.19 (Halfspace). *Let H be a hyperplane. The halfspaces determined by H are the sets*

$$H^+ = \{x \in \mathbb{R}^n; <\theta, x> \geq \alpha\} \text{ and } H^- = \{x \in \mathbb{R}^n ; < \theta, x > \leq \alpha\}.$$

Definition 4.2.20 (Hyperplane). *A hyperplane H of $\mathbb{R}^n$ is an affine subspace of dimension $n - 1$. It is the set*

$$H = \{x \in \mathbb{R}^n ; < x, \theta >= \alpha\}$$

for some $\theta \in \mathcal{S}^{n-1}$ and $\alpha \in \mathbb{R}$.

Definition 4.2.21 (Minkowski sum). *Let A and B be two subsets of $\mathbb{R}^n$. The Minkowski sum of A and B is*

$$A + B = \{a + b; a \in A, b \in B\}.$$

Definition 4.2.22 (Norm). *A function $|\cdot| : \mathbb{R}^n \to \mathbb{R}_+$ is a norm if*

1. *For every $x \in \mathbb{R}^n$, if $|x| = 0$, then $x = 0$.*
2. *For every $x \in \mathbb{R}^n$ and for every $\lambda \geq 0$, one has $|\lambda x| = \lambda |x|$.*
3. *For every $x, y \in \mathbb{R}^n$, one has $|x + y| \leq |x| + |y|$.*

Definition 4.2.23 (Orthogonal of a set). *Let A be a subset of $\mathbb{R}^n$. The orthogonal of A is the set*

$$\{x \in \mathbb{R}^n ; \forall y \in A, < x, y >= 0\}.$$

Definition 4.2.24 (Orthogonal projection on a set)**.** *Let A and K be two subsets of $\mathbb{R}^n$. The orthogonal projection of K on A is the set*

$$\{x \in A\,;\, \exists u \in A^{\perp}, x + u \in K\}.$$

Definition 4.2.25 (Parallel set)**.** *Let A be a subset of $\mathbb{R}^n$. The parallel set of A at distance $t \geq 0$ is the set $A + tB_2^n$.*

Definition 4.2.26 (Parallel volume)**.** *Let A be a measurable subset of $\mathbb{R}^n$. The parallel volume of A is the volume of the parallel set of A, namely $|A + tB_2^n|$, $t \in \mathbb{R}_+$.*

Definition 4.2.27 (Parallel μ-volume)**.** *Let μ be a non-negative measure. Let A be a subset of $\mathbb{R}^n$. The parallel μ-volume of A is the measure, with respect to μ, of the parallel set of A, namely $\mu(A + tB_2^n)$, $t \in \mathbb{R}_+$.*

Definition 4.2.28 (Polytope)**.** *A polytope is the convex hull of a finite number of points.*

Definition 4.2.29 (Polyhedron)**.** *A polyhedron is a finite intersection of halfspaces.*

Definition 4.2.30 (Semi-norm)**.** *A function $p : \mathbb{R}^n \to \mathbb{R}_+$ is a semi-norm if*

1. *For every $x \in \mathbb{R}^n$ and for every $\lambda \geq 0$, one has $p(\lambda x) = \lambda p(x)$.*
2. *For every $x, y \in \mathbb{R}^n$, one has $p(x + y) \leq p(x) + p(y)$.*

Definition 4.2.31 (Simplex)**.** *A simplex in $\mathbb{R}^n$ is the convex hull of $(n + 1)$ points not all contained in a strict affine subspace of $\mathbb{R}^n$.*

Definition 4.2.32 (Support hyperplane)**.** *Let A be a subset of $\mathbb{R}^n$. A hyperplane H is a support hyperplane of C if there exists $x \in C \cap H$ and such that $C \subset H^+$ or $C \subset H^+$.*

The Information theory

Definition 4.2.33 (Entropy - Discrete case)**.** *Let X be a discrete random variable taking values $x_1, \dots, x_n$ with probabilities $p_1, \dots, p_n$ respectively. The entropy of X is*

$$H(X) = -\sum_{i=1}^{n} p_i \log(pi),$$

with the convention that $0 \log(0) = 0$.

Definition 4.2.34 (Entropy - Continuous case)**.** *Let X be a be random vector in $\mathbb{R}^n$ with probability density function f. The entropy of X is*

$$H(X) = -\int f \log(f).$$

Definition 4.2.35 (Entropy power)**.** *Let X be a continuous random vector in $\mathbb{R}^n$. The entropy power of X is*

$$N(X) = \frac{1}{2\pi \mathrm{e}} \mathrm{e}^{\frac{2}{n} H(X)},$$

where $H(X)$ is the entropy of X.

Definition 4.2.36 (Fisher information)**.** *Let X be a continuous random vector in $\mathbb{R}^n$ with score function ρ_X. The Fisher information of X is*

$$I(X) = \mathbb{E}_X[|\rho_X|^2] = \int_{\mathbb{R}^n} \frac{|\nabla f(x)|^2}{f(x)} \, \mathrm{d}x.$$

Definition 4.2.37 (Relative entropy - Discrete case)**.** *Let X and Y be two random variables with probabilities of realization $p_1, \dots, p_n$ and $q_1, \dots, q_n$ respectively. The relative entropy of X with respect to Y is*

$$D(X||Y) = \sum_{i=1}^{n} p_i \log\left(\frac{p_i}{q_i}\right).$$

Definition 4.2.38 (Relative entropy - Continuous case)**.** *Let X and Y be two random vectors with probability densities f and g respectively. The relative entropy of X with respect to Y is*

$$D(X||Y) = \int f \log\left(\frac{f}{g}\right).$$

Definition 4.2.39 (p-th Rényi entropy)**.** *Let $p \in (0,1) \cup (1,+\infty)$. Let X be a continuous random vector in $\mathbb{R}^n$. The p-th Rényi entropy of X is*

$$H_p(X) = \frac{1}{1-p} \log \left(\int_{\mathbb{R}^n} f^p(x) \, \mathrm{d}x \right).$$

Definition 4.2.40 (Score function)**.** *Let X be a continuous random vector in $\mathbb{R}^n$ with probability density f. The score function of X is*

$$\rho_X(x) = \frac{\nabla f(x)}{f(x)}, \quad x \in \mathbb{R}^n.$$

Notations

$\mathbb{N}$: Set of non-negative integers
$\mathbb{R}$: Set of real numbers
$\mathbb{R}_+$: Set of non-negative real numbers
$\mathbb{R}^n$: Set of n-tuples with value in $\mathbb{R}$
$\{e_1, \ldots, e_n\}$: Canonical basis of $\mathbb{R}^n$
$< \cdot, \cdot >$: Scalar product
$|x|$: Euclidean norm of $x \in \mathbb{R}^n$
B_2^n: Euclidean closed unit ball
$\mathcal{S}^{n-1}$: Euclidean closed unit sphere
$d(x, A)$: Distance from the point x to the set A
$\in$: Belong to
$\subset$: Included in
A, B: Subsets of $\mathbb{R}^n$
K, L: Convex bodies of $\mathbb{R}^n$
$A + B$: Minkowski sum of A and B
λA: Dilates of A
$|A|$: Volume of A
V_A: Parallel volume of A
1_A: Indicator function of A
$A^\perp$: Orthogonal of A
$\mathrm{Aff}(A)$: Affine space generated by A
∂A: Boundary of A
$\mathrm{conv}(A)$: Convex hull of A
$\mathrm{diam}(A)$: Diameter of A
$\mathrm{card}(A)$: Cardinal of A
$\mathrm{int}(A)$: Interior of A
$\overline{A}$: closure of A

$\angle$: Angle

$\widehat{\ }$: Arc

f, g, h: Functions

$f \star g$: Convolution of f and g

f'_+: Right derivative of f

f'_-: Left derivative of f

$\frac{\partial}{\partial x}$: Partial derivative

∇f: Gradient of f

Δ: Laplace operator

$Hess(f)$: Hessian of f

L^p: Set of p-integrable functions

$\|f\|_p$: L^p norm of f

$\mathrm{supp}(f)$: Support of f

$\lim f_n$: Limit of the sequence (f_n)

$\det(M)$: Determinant of M

$HessM$: Hessian of M

X, Y: Random vectors in $\mathbb{R}^n$

$\mathbb{E}[X]$: Expectation of X

$Var(X)$: Variance of X

$H(X)$: Entropy of X

$N(X)$: entropy power of X

$H_p(X)$: p-th Rényi entropy of X

$I(X)$: Fisher information of X

ρ_X: Score function of X

$D(X||Y)$: Relative entropy of X with respect to Y

log: Logarithm function

e: Exponential function

μ: non-negative measure

$\mathcal{H}^n$: n-dimensional Hausdorff measure

Index

γ-concave function, 113
(B)-conjecture, 96

Brunn-Minkowski inequality, 11–13, 15, 18, 19, 21, 22, 40, 42, 43, 45, 49–51, 54–56, 62, 68, 93, 103
Brunn-Minkowski theory, 11, 13, 40, 42, 43, 47, 49, 50, 62, 69, 71, 111, 113

Convex body, 11–13, 46, 51, 52, 56, 57, 63, 65, 69, 84, 89, 113, 119
Convex geometry, 11
Convex measure, 11, 45, 47, 81, 91, 93–95, 98
Convex set, 51, 82, 93, 97, 113, 114

Entropy, 25, 28–30, 116, 120
Entropy power, 11, 32, 36, 38–40, 42, 43, 47, 49, 50, 62, 69, 106, 107, 110, 116, 120

Fisher information, 32, 35, 44, 50, 69, 116, 120

Gaussian measure, 45, 50, 69, 93–97, 99, 101

Hamilton-Jacobi, 72, 74, 75
Hyperplane, 12, 102, 114, 115

Information theory, 11, 24, 28, 34–36, 39, 40, 42, 43, 50, 51, 62, 69, 107, 116

Isoperimetric inequality, 12, 13, 43–45, 49, 50, 54–56, 58, 69

Localization, 84, 85, 89, 91

Minkowski sum, 43, 114, 119

Parallel set, 51, 55, 71, 115
Parallel volume, 11, 13, 47, 51, 52, 56, 62, 71, 72, 81, 91, 103, 104, 115, 119

Rényi entropy, 33, 40, 62, 117, 120
Relative entropy, 31, 116, 120

s-concave measure, 45, 81–83, 89, 90, 92, 98, 113
Sub-convex measure, 94, 103