HAL
open science

Constructions of real algebraic surfaces

Arthur Renaudineau

To cite this version:

Arthur Renaudineau. Constructions of real algebraic surfaces. Algebraic Topology [math.AT]. Université Pierre et Marie Curie - Paris VI, 2015. English. NNT : 2015PA066249 . tel-01236002

HAL Id: tel-01236002

https://theses.hal.science/tel-01236002

Submitted on 1 Dec 2015

HAL is a multi-disciplinary open access archive for the deposit and dissemination of scientific research documents, whether they are published or not. The documents may come from teaching and research institutions in France or abroad, or from public or private research centers.

L'archive ouverte pluridisciplinaire **HAL**, est destinée au dépôt et à la diffusion de documents scientifiques de niveau recherche, publiés ou non, émanant des établissements d'enseignement et de recherche français ou étrangers, des laboratoires publics ou privés.

Université Pierre et Marie Curie

Institut de Mathématiques de
Jussieu-Paris Rive Gauche

École Doctorale de Science Mathématiques de Paris Centre

Thèse de doctorat

Discipline : Mathématiques

présentée par

Arthur Renaudineau

Constructions de surfaces algébriques réelles

---

dirigée par Erwan Brugallé et Ilia Itenberg

Université Pierre et Marie Curie
École Doctorale de Sciences
Mathématiques de Paris Centre
Case 290
4 place Jussieu
75252 Paris Cedex 05

Institut de Mathématiques de Jussieu-
Paris Rive Gauche
Case 247
4 place Jussieu
75252 Paris Cedex 05

Table des matières

1 Introduction **5**
1.1 Historique . . . 5
1.1.1 Courbes algébriques réelles dans $\mathbb{CP}^2$ . . . 6
1.1.2 Surfaces algébriques réelles . . . 8
1.1.3 Revêtements doubles . . . 10
1.2 Résultats . . . 11
1.2.1 Chapitre 3 : Une construction tropicale de courbes réductibles . . . 11
1.2.2 Chapitre 4 : Une surface de degré 6 avec 45 anses . . . 12
1.2.3 Chapitre 5 : Surfaces algébriques réelles dans $(\mathbb{CP}^1)^3$ avec un grand nombre d'anses 12

2 Preliminaries **15**
2.1 Toric varieties and polytopes . . . 15
2.2 Viro's method . . . 17
2.2.1 T-construction . . . 17
2.2.2 General Viro's method . . . 19
2.2.3 Gluing of singular points . . . 20
2.3 Basic tropical geometry . . . 22
2.3.1 Integer polyhedral complexes . . . 22
2.3.2 Tropical hypersurfaces . . . 23
2.3.3 Amoebas and patchworking . . . 24
2.3.4 Tropical modifications of $\mathbb{R}^n$ . . . 27

3 A tropical construction of reducible curves **31**
3.1 Introduction . . . 31
3.2 Strategy of the construction . . . 32
3.3 Construction of X_n, $\tilde{C}_n$ and Y_n . . . 33
3.4 Real phases on X_n and Y_n . . . 38

4 A real sextic surface with 45 handles **43**
4.1 Introduction and statement of the main result . . . 43
4.2 An equivariant deformation . . . 44
4.3 Construction of a surface X of degree 6 with 45 handles . . . 46
4.3.1 The auxilliary surface Z . . . 47
4.3.2 The surface Y . . . 51

5 Real algebraic surfaces in $(\mathbb{CP}^1)^3$ with many handles **55**
5.1 Introduction and statement of results . . . 55
5.2 Orientability of closed two-dimensional submanifolds of $(\mathbb{RP}^1)^3$ . . . 56
5.3 Double covering of certain blow-ups of $(\mathbb{CP}^1)^2$ . . . 59

5.4 A family of real algebraic surfaces of tridegree $(2k, 2l, 2)$ in $(\mathbb{CP}^1)^3$ with asymptotically maximal n
5.5 Counterexample to Viro's conjecture in tridegree $(4, 4, 2)$ 69
5.6 Transversality theorems 71
5.6.1 Notations 71
5.6.2 Brusotti theorem 72
5.6.3 Linear system of curves with prescribed quadratic points 72
5.6.4 A transversality theorem 74

Bibliography **79**

Chapitre 1

Introduction

1.1 Historique

Une *variété algébrique réelle* est une variété algébrique complexe X munit d'une involution antiholomorphe $c : X \to X$, appelée *structure réelle* sur X. *La partie réelle* $\mathbb{R}X$ d'une variété algébrique réelle (X, c) est l'ensemble des points fixes de l'involution c. Nous considérerons toujours, sauf indication du contraire, des variétés algébriques réelles non singulières. Par exemple, $\mathbb{CP}^n$ munit de la structure réelle donnée par la conjugaison complexe est une variété algébrique réelle de dimension n et sa partie réelle est $\mathbb{RP}^n$. Par la suite, nous considérerons toujours $\mathbb{CP}^n$ munit de la conjugaison complexe. Une hypersurface X dans $\mathbb{CP}^n$ donnée par un polynôme homogène en $n+1$ variables à coefficients réels est une sous-variété algébrique réelle de $\mathbb{CP}^n$ et on a $\mathbb{R}X \subset \mathbb{RP}^n$. Les deux problèmes suivants sont fondamentaux dans l'étude de la topologie des variétés algébriques réelles.

Problème 1. *Classifier, à homéomorphisme près, les parties réelles des hypersurfaces algébriques réelles non singulières de degré donné dans* $\mathbb{CP}^n$.

Problème 2. *Classifier, à homéomorphisme près, les paires* $(\mathbb{RP}^n, \mathbb{R}X)$*, où* X *parcours l'ensemble des hypersurfaces algébriques réelles non singulières de degré donné dans* $\mathbb{CP}^n$.

Les premiers travaux sur ces problèmes ont portés sur les courbes dans $\mathbb{CP}^2$ et les surfaces dans $\mathbb{CP}^3$. A. Harnack, en 1876 a résolut le Problème 1 pour les courbes dans $\mathbb{CP}^2$ (voir [Har76]).

Théorème. (*Harnack, [Har76]*)
La partie réelle d'une courbe algébrique réelle non singulière de degré d *dans* $\mathbb{CP}^2$ *a au plus*

$$l(d) = \frac{(d-1)(d-2)}{2} + 1$$

composantes connexes. De plus, pour tout nombre k *compris entre* 0 *et* $l(d)$ *si* d *et pair, ou entre* 1 *et* $l(d)$ *si* d *est impair, il existe une courbe algébrique réelle non singulière de degré* d *dans* $\mathbb{CP}^2$ *dont la partie réelle a* k *composantes connexes.*

F. Klein a montré à la même période que si C est une courbe algébrique réelle non singulière compacte, alors le nombre de composantes connexes de $\mathbb{R}C$ est au plus $g(C)+1$, où $g(C)$ désigne le genre de C. Klein généralisait ainsi l'inégalité de Harnack. Une courbe algébrique réelle C est appelée *M-courbe*, ou courbe *maximale*, si $\mathbb{R}C$ a le nombre maximal $g(C)+1$ de composantes connexes. Une courbe algébrique réelle C est appelée $(M-a)$-courbe si $\mathbb{R}C$ a $g(C)+1-a$ composantes connexes. En 1900, D. Hilbert inclut dans le

seizième problème de sa fameuse liste des 23 problèmes mathématiques pour le XX-ième siècle (voir [Hil02]) la question de classifier les types topologiques possibles des paires $\left(\mathbb{RP}^2, \mathbb{R}C\right)$ pour les courbes algébriques réelles C de degré 6 dans $\mathbb{CP}^2$ et la question de classifier les types topologiques possibles des parties réelles $\mathbb{R}X$ pour les surfaces algébriques réelles X de degré 4 dans $\mathbb{CP}^3$. Durant la première moitié du XX-ième siècle, des mathématiciens comme L. Brusotti ou I. G. Petrovsky ont étudiés ces questions, mais ce n'est qu'au début des années 70 que se réalisent d'importants progrès, notamment grâce aux travaux de V. Arnold (voir [Arn71]) et V.A. Rokhlin (voir [Rok72b], [Rok72a], [Rok73] and [Rok74]). En 1969, D.A. Gudkov a complété la classification des types topologiques des paires $\left(\mathbb{RP}^2, \mathbb{R}C\right)$ pour les courbes algébriques réelles non singulières C de degré 6 dans $\mathbb{CP}^2$ (voir [Gud69]). En 1976-1978, V. Kharlamov a complété la classification topologique des parties réelles $\mathbb{R}X$ et a obtenu la classification topologique des paires $\left(\mathbb{RP}^3, \mathbb{R}X\right)$ pour les surfaces algébriques réelles non singulières X de degré 4 dans $\mathbb{CP}^3$ (voir [Kha76] et [Kha78]). A la fin des années 70, O. Viro découvre une nouvelle méthode pour construire des hypersurfaces algébriques réelles dans $\mathbb{CP}^n$ (et en fait dans toutes les variétés toriques), qui lui permit d'obtenir la classification des types topologiques des paires $\left(\mathbb{RP}^2, \mathbb{R}C\right)$ pour les courbes algébriques réelles C de degré 7 dans $\mathbb{CP}^2$ (voir [Vir84]). La *méthode de Viro*, ou *méthode du patchwork*, est toujours de nos jours l'une des méthodes les plus puissantes pour construire des hypersurfaces algébriques réelles dans les variétés toriques en contrôlant la topologie des hypersurfaces. Il existe plusieurs versions de la méthode de Viro. Nous présenterons dans le chapitre 2 le *patchwork combinatoire*, également appelé *T-construction*, puis la méthode de Viro générale et enfin l'extension faite par E. Shustin (voir [Shu98]) pour construire des hypersurfaces algébriques réelles singulières.
A la fin des années 90, Viro remarqua que sa méthode du patchwork pouvait s'interpréter comme quantification d'objets linéaires par morceaux (voir [Vir01]). Cela marquait le début de la géométrie tropicale qui fut par la suite largement développée notamment par G. Mikhalkin (voir par exemple [Mik04], [Mik05] et [Mik06]). En particulier, Mikhalkin donna une reformulation de la méthode du patchwork en termes tropicaux et énonça le théorème de correspondance, créant un pont entre la géométrie énumérative tropicale et la géométrie énumérative complexe et réelle (voir [Mik05]). Une version tropicale de la méthode du patchwork intervient comme élément clé de la démonstration du théorème de correspondance.
Nous présentons maintenant quelques résultats sur la topologie des courbes algébriques réelles dans $\mathbb{CP}^2$ et plus généralement sur la topologie des variétés algébriques réelles. On pourra aussi consulter [Wil78] et [DK00] pour une introduction à la topologie des variétés algébriques réelles. Nous présentons également des questions qui ont motivé nos recherches.

1.1.1 Courbes algébriques réelles dans $\mathbb{CP}^2$

Si A est une courbe algébrique réelle non singulière dans $\mathbb{CP}^2$, sa partie réelle $\mathbb{R}A$ est une union disjointe de cercles plongés dans $\mathbb{RP}^2$. Un cercle peut être plongé dans $\mathbb{RP}^2$ de deux manières différentes : s'il sépare $\mathbb{RP}^2$ en deux composantes connexes il est appelé *ovale*, sinon il est appelé *pseudo-droite*. Si le degré de la courbe A est pair, alors la partie réelle $\mathbb{R}A$ est uniquement constituée d'ovales. Si le degré de la courbe A est impaire, alors il existe une unique composante de $\mathbb{R}A$ qui soit une pseudo-droite. Un ovale sépare $\mathbb{RP}^2$ en une composante connexe homéomorphe à un disque (l'*intérieur* de l'ovale) et une composante connexe homéomorphe à un ruban de Moebius (l'*extérieur* de l'ovale). Soit A une courbe algébrique réelle de degré pair dans $\mathbb{RP}^2$. Un ovale de $\mathbb{R}A$ est appelé *ovale pair* s'il est contenu à l'intérieur d'un nombre pair d'ovales de $\mathbb{R}A$, et *impair* sinon. Remarquons que si f est un polynôme homogène définissant A, alors, le degré de f étant pair, le signe

de f en un point de $\mathbb{RP}^2$ est bien défini. Si l'on suppose que le signe de f est négatif en dehors de tout ovale de $\mathbb{R}A$, alors les ovales pairs sont les ovales qui bordent extérieurement les composantes connexes de

$$\mathbb{RP}^2_+ = \{x \in \mathbb{RP}^2 | f(x) \geq 0\},$$

et les ovales impairs sont les ovales qui bordent extérieurement les composantes connexes de

$$\mathbb{RP}^2_- = \{x \in \mathbb{RP}^2 | f(x) \leq 0\}.$$

Notons p (resp., n) le nombre d'ovales pairs (resp., impairs) de $\mathbb{R}A$.

Inégalités de Petrovsky : Pour toute courbe algébrique réelle de degré $2k$ dans $\mathbb{CP}^2$, on a

$$-\frac{3}{2}k(k-1) \leq p - n \leq \frac{3}{2}k(k-1) + 1.$$

On peut parfois renforcer ces inégalités. Notons p^- (resp., n^-) le nombre d'ovales pairs (resp., impairs) qui bordent extérieurement une composante connexe de $\mathbb{RP}^2_+$ (resp., $\mathbb{RP}^2_-$) de caractéristique d'Euler strictement négative.

Inégalités de Petrovsky renforcées : Pour toute courbe algébrique réelle de degré $2k$ dans $\mathbb{CP}^2$, on a

$$-\frac{3}{2}k(k-1) \leq p^- - n \quad \text{et} \quad p - n^- \leq \frac{3}{2}k(k-1) + 1.$$

Congruence de Rokhlin : Pour toute M-courbe algébrique réelle de degré $2k$ dans $\mathbb{CP}^2$, on a

$$p - n \equiv k^2 \mod 8.$$

Congruence de Gudkov-Krakhnov-Kharlamov : Pour toute $(M-1)$-courbe algébrique réelle de degré $2k$ dans $\mathbb{CP}^2$, on a

$$p - n \equiv k^2 \pm 1 \mod 8.$$

On peut déduire du théorème de Harnack et des inégalités de Petrovsky des bornes supérieures pour p et n :

$$p \leq \frac{7}{4}k^2 - \frac{9}{4}k + \frac{3}{2},$$

et

$$n \leq \frac{7}{4}k^2 - \frac{9}{4}k + 1.$$

En 1906, V. Ragsdale énonça la conjecture suivante (voir [Rag06]).

Conjecture. (*Ragsdale*)
Pour tout courbe algébrique réelle de degré $2k$ dans $\mathbb{CP}^2$, on a

$$p \leq \frac{3}{2}k(k-1) + 1,$$

et

$$n \leq \frac{3}{2}k(k-1).$$

En 1980, Viro a construit des exemples de courbes algébriques réelles de degré $2k$ avec

$$n = \frac{3}{2}k(k-1) + 1,$$

et proposa de remplacer la deuxième inégalité de la conjecture de Ragsdale par l'inégalité

$$n \leq \frac{3}{2}k(k-1) + 1,$$

voir [Vir80]. Cette conjecture fut également proposée par Petrovsky (voir [Pet38]).
En 1993, I. Itenberg a utilisé le patchwork combinatoire pour construire, pour tout $k \geq 5$, une courbe algébrique réelle de degré $2k$ dans $\mathbb{CP}^2$ avec

$$p = \frac{3}{2}k(k-1) + 1 + \left\lfloor \frac{(k-3)^2+4}{8} \right\rfloor,$$

ainsi qu'une courbe algébrique réelle de degré $2k$ dans $\mathbb{CP}^2$ avec

$$n = \frac{3}{2}k(k-1) + \left\lfloor \frac{(k-3)^2+4}{8} \right\rfloor,$$

voir [Ite95]. Cette construction a été ensuite amélioré par B. Haas (voir [Haa95]) puis par Itenberg (voir [Ite01]) et finalement par E. Brugallé (voir [Bru06]). Brugallé a construit une famille de courbes algébrique réelles de degré $2k$ dans $\mathbb{CP}^2$ avec un nombre asymptotiquement maximal d'ovales pairs et une famille de courbes algébriques réelles de degré $2k$ dans $\mathbb{CP}^2$ avec un nombre asymptotiquement maximal d'ovales impairs. Plus précisément, Brugallé a construit une famille de courbes algébriques réelles de degré $2k$ dans $\mathbb{CP}^2$ avec

$$\lim_{k \to +\infty} \frac{p}{k^2} = \frac{7}{4},$$

et famille de courbes algébriques réelles de degré $2k$ dans $\mathbb{CP}^2$ avec

$$\lim_{k \to +\infty} \frac{n}{k^2} = \frac{7}{4}.$$

1.1.2 Surfaces algébriques réelles

Dans ce texte, sauf indication du contraire, l'homologie sera toujours considérée à coefficients dans $\mathbb{Z}/2\mathbb{Z}$. Pour un espace topologique A, on note $b_i(A) = \dim_{\mathbb{Z}/2\mathbb{Z}} H_i(A\,;\,\mathbb{Z}/2\mathbb{Z})$. Les nombres $b_i(A)$ sont appelés *nombres de Betti* (à coefficients dans $\mathbb{Z}/2\mathbb{Z}$) de A. On commence par rappeler des inégalités et congruences classiques en topologie des variétés algébriques réelles.

Inégalité et congruence de Smith-Thom : Soit X une variété algébrique réelle compacte. Alors

$$b_*(\mathbb{R}X) \leq b_*(X) \text{ et } b_*(\mathbb{R}X) \equiv b_*(X) \mod 2,$$

où b_* dénote la somme des nombres de Betti. Une variété algébrique réelle X est appelée M-variété si $b_*(\mathbb{R}X) = b_*(X)$. Une variété algébrique réelle X est appelé $(M-a)$-variété si $b_*(\mathbb{R}X) = b_*(X) - 2a$.

Inégalités de Petrovsky-Oleinik : Soit X une variété compacte complexe de Kähler de dimension $4n$ avec une structure réelle. Alors

$$2 - h^{n,n}(X) \leq \chi(\mathbb{R}X) \leq h^{n,n}(X),$$

où χ désigne la caractéristique d'Euler et $h^{p,q}$ désigne le nombre de Hodge (p,q). Dans le cas où X est de dimension réelle 4, les inégalités de Petrovsky-Oleinik deviennent les inégalités de Comessatti (voir [Com28]). Si (X,c) est une surface algébrique réelle, considérons $E = H_2(X\,;\,\mathbb{R})$ munit de la forme quadratique q provenant du produit d'intersection sur X, et considérons l'involution c_* sur E provenant de l'involution antiholomorphe c sur X. On a alors la décomposition

$$E = E_+^+ \oplus E_+^- \oplus E_-^+ \oplus E_-^-,$$

où E_ε^δ est le sous espace de E sur lequel c_* agit comme $\varepsilon\mathrm{Id}$ et q est de signe δ. Les inégalités de Comessatti sont un corollaire direct des égalités

$$2 - h^{1,1}(X) + 2\rho = \chi(\mathbb{R}X) = h^{1,1}(X) - 2\nu,$$

où $\rho = \dim(E_+^-)$ et $\nu = \dim(E_-^-)$. Notons en particulier que toute composante connexe de $\mathbb{R}X$ de caractéristique d'Euler strictement positive donne un élément de E_+^-. Ceci permet parfois de renforcer les inégalités de Comessatti. Pour d'autres types de renforcements, voir [DK00].

Congruence de Rokhlin : Soit X une M-variété compacte de dimension réelle $4n$. Alors

$$\chi(\mathbb{R}X) \equiv \sigma(X) \mod 16,$$

où $\sigma(X)$ désigne la signature de X.

Congruence de Gudkov-Krakhnov-Kharlamov : Soit X une $(M-1)$-variété compacte de dimension réelle $4n$. Alors

$$\chi(\mathbb{R}X) \equiv \sigma(X) \pm 2 \mod 16.$$

Soit X une surface algébrique réelle connexe, simplement connexe et projective. Une application de l'inégalité de Smith-Thom et des inégalités de Comessatti permet d'obtenir des bornes supérieures pour $b_0(\mathbb{R}X)$ et $b_1(\mathbb{R}X)$ en termes des nombres de Hodge de la surface X. On obtient

$$b_0(\mathbb{R}X) \leq \frac{1}{2}(h^{2,0}(X) + h^{1,1}(X) + 1), \tag{1.1}$$

$$b_1(\mathbb{R}X) \leq h^{2,0}(X) + h^{1,1}(X). \tag{1.2}$$

Rappelons que si X est une surface algébrique de degré d dans $\mathbb{CP}^3$, alors

$$h^{2,0}(X) = \frac{1}{6}d^3 - d^2 + \frac{11}{6}d - 1, \tag{1.3}$$

et

$$h^{1,1}(X) = \frac{2}{3}d^3 - 2d^2 + \frac{7}{3}d, \tag{1.4}$$

voir par exemple [Hir95]. Si X est une surface algébrique réelle de degré d dans $\mathbb{CP}^3$, on obtient alors les inégalités suivantes.

$$b_0(\mathbb{R}X) \leq \frac{5}{12}d^3 - \frac{3}{2}d^2 + \frac{25}{12}d, \tag{1'}$$

$$b_1(\mathbb{R}X) \leq \frac{5}{6}d^3 - 3d^2 + \frac{25}{6}d - 1. \tag{2'}$$

On peut alors se poser les questions suivantes.

Question 1. *Quelle est la valeur maximale de $b_0(\mathbb{R}X)$ parmi les surfaces X de degré donné dans $\mathbb{CP}^3$?*

Question 2. *Quelle est la valeur maximale de $b_1(\mathbb{R}X)$ parmi les surfaces X de degré donné dans $\mathbb{CP}^3$?*

Si le degré est strictement supérieure à 4, ces questions sont toujours largement ouvertes. En degré 5 les bornes sont données par $b_0(\mathbb{R}X) \leq 25$ et $b_1(\mathbb{R}X) \leq 47$. La question de l'existence d'une surface algébrique réelle X de degré 5 dans $\mathbb{CP}^3$ satisfaisant $b_1(\mathbb{R}X) = 47$ est toujours ouverte. Le meilleur résultat concernant la question 1 est du dans ce cas à S. Orevkov qui a construit une surface algébrique réelle X de degré 5 dans $\mathbb{CP}^3$ satisfaisant $b_0(\mathbb{R}X) = 23$ (voir [Ore01]). En 1980, Viro a proposé la conjecture suivante.

Conjecture. (*Viro*)
Soit X une surface algébrique réelle connexe, simplement connexe et projective. Alors

$$b_1(\mathbb{R}X) \leq h^{1,1}(X).$$

1.1.3 Revêtements doubles

Nous allons voir que les restrictions données plus haut pour les courbes sont en fait un cas particulier des restrictions données pour les surfaces. De même, la conjecture de Viro est une généralisation de la conjecture de Ragsdale.
Soit A une courbe algébrique réelle de degré $2k$ dans $\mathbb{CP}^2$. Le degré de A étant pair, il existe un revêtement double X de $\mathbb{CP}^2$ ramifié le long de A. La conjugaison complexe *conj* sur $\mathbb{CP}^2$ se relève en deux involutions antiholomorphes c_+ et c_- sur X échangées par l'application de revêtement. Notons X_+ (resp., X_-) la surface algébrique réelle (X, c_+) (resp., (X, c_-)). Quitte à échanger c_+ et c_-, on peut supposer que $\mathbb{R}X_+$ (resp., $\mathbb{R}X_-$) se projette sur $\mathbb{RP}^2_+$ (resp., $\mathbb{RP}^2_-$), voir section 1.1.1. En appliquant les restrictions données pour les surfaces à X_- et X_+, on obtient immédiatement les restrictions données pour les courbes. De même, si A est un contre-exemple à la conjecture de Ragsdale pour p (resp., n), alors X_- (resp., X_+) est un contre-exemple à la conjecture de Viro. En utilisant les contre-exemples à la conjecture de Ragsdale, Itenberg a construit un contre-exemple à la conjecture de Viro parmi les surfaces de degré 10 et des surfaces de degré d dans $\mathbb{CP}^3$ satisfaisant

$$b_1(\mathbb{R}X) = h^{1,1}(X) + \frac{d^3}{144} + O(d^2),$$

voir [Ite97]. Par la suite, F. Bihan a construit un contre-exemple à la conjecture de Viro parmi les surfaces de degré 6 (voir [Bih01]) et s'est intéressé au comportement asymptotique des nombres de Betti de la partie réelle des surfaces algébriques réelles dans $\mathbb{CP}^3$. Notons $\mathcal{S}_d$ l'ensemble des surfaces algébriques réelles non singulières de degré d dans $\mathbb{CP}^3$ et $\mathcal{R}_k$ l'ensemble des revêtements doubles de $\mathbb{CP}^2$ ramifié le long d'une courbe algébrique réelle non singulière de degré $2k$. Bihan a montré dans [Bih03] l'existence de limites

$$\lim_{d\to+\infty} \frac{\max_{X\in\mathcal{S}_d} b_i(\mathbb{R}X)}{d^3} = \zeta_{i,3} \quad \text{et} \quad \lim_{d\to+\infty} \frac{\max_{Y\in\mathcal{R}_k} b_i(\mathbb{R}Y)}{k^2} = \delta_{i,2},$$

pour $i \in \{0, 1\}$.

Théorème. (*Bihan, voir [Bih03]*) *On a*

$$\frac{\delta_{0,2}}{6} + \frac{1}{12} \leq \zeta_{0,3} \quad \textit{et} \quad \frac{\delta_{1,2}}{6} + \frac{1}{6} \leq \zeta_{1,3}.$$

La construction asymptotique de Brugallé (voir [Bru06]) donne les valeurs

$$\delta_{0,2} = \frac{7}{4} \quad \text{et} \quad \delta_{1,2} = \frac{7}{2}.$$

Cela fournit les meilleurs bornes inférieurs connues actuellement pour $\zeta_{0,3}$ et $\zeta_{1,3}$. Plus précisément, on a

$$\frac{3}{8} \leq \zeta_{0,3} \leq \frac{5}{12} \quad \text{et} \quad \frac{3}{4} \leq \zeta_{1,3} \leq \frac{5}{6}.$$

Tous les contre-exemples connus à la conjecture de Viro ne sont pas des M-surfaces (le premier contre-exemple à la conjecture de Ragsdale construit par Itenberg était une $(M-2)$-courbe). Une question toujours ouverte en topologie des variétés algébriques réelles est la suivante.

Question 3. *La conjecture de Viro est-elle vraie pour les M-surfaces ?*

1.2 Résultats

1.2.1 Chapitre 3 : Une construction tropicale de courbes réductibles

On utilise dans ce chapitre la géométrie tropicale, et plus particulièrement les modifications tropicales, pour donner une nouvelle construction d'une famille de courbes algébriques réelles réductibles $\mathcal{D}_n \cup \mathcal{C}_n$ dans la n-ième surface de Hirzebruch Σ_n. Cette famille avait été construite initialement par Brugallé dans [Bru06] et est l'ingrédient fondamental de la preuve de l'existence d'une famille de courbes algébriques réelles dans $\mathbb{CP}^2$ avec un nombre asymptotiquement maximal d'ovales pairs. La preuve de Brugallé était basée sur le théorème d'existence de Riemann (voir [Bru06] et [Ore03]) et était donc non-constructive. On donne une preuve, constructive, basée sur les modifications tropicales et la méthode de Viro pour les intersections complètes. Plus précisément, on construit tout d'abord deux courbes tropicales C_n et D_n dans le plan $\mathbb{R}^2$. On considère ensuite la modification tropicale X_n de $\mathbb{R}^2$ par rapport à D_n et un relevé $\tilde{C}_n$ de C_n dans X_n qui soit intersection transverse de X_n avec Y_n, une autre surface tropicale. Notons $(\mathcal{X}_{n,t})_{t\in\mathbb{R}}$ (resp., $(\mathcal{Y}_{n,t})_{t\in\mathbb{R}}$) une famille de surfaces approximant X_n (resp., Y_n), et $(\mathcal{D}_{n,t})_{t\in\mathbb{R}}$ une famille de courbes approximant D_n, et posons

$$\mathcal{C}_{n,t} = \pi^{\mathbb{C}}(\mathcal{X}_{n,t} \cap \mathcal{Y}_{n,t}),$$

où $\pi^{\mathbb{C}} : (\mathbb{C}^*)^3 \to (\mathbb{C}^*)^2$ désigne la projection sur les deux premières coordonnées. On pose alors

$$\mathcal{D}_n = \mathcal{D}_{n,t},$$

et

$$\mathcal{C}_n = \mathcal{C}_{n,t},$$

pour un nombre réel t assez grand.

1.2.2 Chapitre 4 : Une surface de degré 6 avec 45 anses

Soit X une surface algébrique réelle de degré 6 dans $\mathbb{CP}^3$. En applicant l'inégalité de Smith-Thom et l'une des deux inégalités de Comessatti à X, on a

$$b_1(\mathbb{R}X) \leq h^{1,1}(X) + 10 = 96.$$

De plus, la congruence de Rokhlin permet d'interdire l'existence d'une surface algébrique réelle X de degré 6 telle que $b_1(\mathbb{R}X) = 96$. Finalement, si X est une surface algébrique de degré 6 dans $\mathbb{CP}^3$, on a

$$b_1(\mathbb{R}X) \leq h^{1,1}(X) + 8 = 94.$$

F. Bihan a montré dans [Bih01] le théorème suivant.

Théorème. (*Bihan*)
Il existe une surface algébrique réelle X_0 de degré 6 dans $\mathbb{CP}^3$ telle que

$$\mathbb{R}X_0 \simeq 6S \coprod S_2 \coprod S_{42},$$

où S est une sphère et S_α est une sphère avec α anses. La surface X_0 est une $(M-2)$-surface qui vérifie

$$b_1(\mathbb{R}X_0) = h^{1,1}(X_0) + 2 = 88.$$

Pour construire ce contre-exemple à la conjecture de Viro parmi les surfaces de degré 6, Bihan a utilisé le patchwork combinatoire et une version équivariante d'une déformation due à Horikawa (voir [Hor93]). On montre dans le chapitre 6 le théorème suivant.

Théorème. *Il existe une surface algébrique réelle X de degré 6 dans $\mathbb{CP}^3$ telle que*

$$\mathbb{R}X \simeq 4S \coprod 2S_2 \coprod S_{41}.$$

La surface X est une $(M-2)$-surface qui vérifie

$$b_1(\mathbb{R}X) = h^{1,1}(X) + 4 = 90.$$

La question de l'existence d'une surface algébrique réelle X de degré 6 dans $\mathbb{CP}^3$ telle que $92 \leq b_1(\mathbb{R}X) \leq 94$ est toujours ouverte. La différence principale de notre construction par rapport à celle de Bihan est que nous utilisons la méthode de Viro générale. Pour ce faire, nous utilisons une courbe algébrique réelle construite par Brugallé (voir [Bru06]) et nous considérons une surface singulière à la place du revêtement double classique.

1.2.3 Chapitre 5 : Surfaces algébriques réelles dans $(\mathbb{CP}^1)^3$ avec un grand nombre d'anses

On s'intéresse dans ce chapitre aux surfaces algébriques réelles dans $(\mathbb{CP}^1)^3$ munit de la structure réelle donnée par la conjugaison complexe sur chaque facteur. Une surface algébrique réelle X de tridegré (d_1, d_2, d_3) dans $(\mathbb{CP}^1)^3$ est l'ensemble des zéros d'un polynôme réel

$$P \in \mathbb{R}[u_1, v_1, u_2, v_2, u_3, v_3]$$

homogène de degré d_i dans les variables (u_i, v_i), pour $1 \leq i \leq 3$. Quitte à permutter les facteurs, on peut toujours supposer que $d_1 \geq d_2 \geq d_3$. Introduisons l'application $\pi : (\mathbb{CP}^1)^3 \to (\mathbb{CP}^1)^2$ de projection sur les deux premiers facteurs. Si X est une surface

algébrique de tridegré $(d_1, d_2, 1)$ dans $(\mathbb{CP}^1)^3$, alors $\pi|_X$ est de degré 1, et X est birationellement équivalente à $(\mathbb{CP}^1)^2$. Il s'ensuit que $h^{2,0}(X) = 0$, et donc la conjecture de Viro est vraie pour les surfaces algébriques réelles de tridegré $(d_1, d_2, 1)$ dans $(\mathbb{CP}^1)^3$. Supposons maintenant que X est de tridegré $(d, 2, 2)$. La projection $\tilde{\pi} : (\mathbb{CP}^1)^3 \to \mathbb{CP}^1$ sur le premier facteur induit une fibration elliptique sur X. Or Kharlamov a montré (voir [AM08]) que la conjecture de Viro est vraie pour les surfaces elliptiques. On en déduit que la conjecture de Viro est vraie pour les surfaces algébriques réelles de tridegré $(d, 2, 2)$ dans $(\mathbb{CP}^1)^3$.
Supposons maintenant que X soit une surface algebrique réelle de tridegré $(4, 4, 2)$ dans $(\mathbb{CP}^1)^3$. On a alors $h^{2,0}(X) = 9$ et $h^{1,1}(X) = 84$. En utilisant l'inegalité de Smith-Thom et une des deux inégalités de Comessatti, on obtient

$$b_1(\mathbb{R}X) \leq 92 = h^{1,1}(X) + 8.$$

On montre alors le résultat suivant.

Théorème. *Il existe une surface algébrique réelle X de tridegré $(4, 4, 2)$ dans $(\mathbb{CP}^1)^3$ telle que*

$$\mathbb{R}X \simeq 3S \coprod 2S_2 \coprod S_{40}.$$

La surface X est une $(M-2)$-surface et satisfait

$$b_1(\mathbb{R}X) = 88 = h^{1,1}(X) + 4.$$

La question de l'existence d'une surface algébrique réelle de tridegré $(4, 4, 2)$ dans $(\mathbb{CP}^1)^3$ telle que $90 \leq b_1(\mathbb{R}X) \leq 92$ est toujours ouverte. De même, pour $d \geq 3$, la question de l'existence d'une surface algébrique réelle de tridegré $(d, 3, 2)$ dans $(\mathbb{CP}^1)^3$ fournissant un contre-exemple à la conjecture de Viro est toujours ouverte.
On s'intéresse ensuite au comportement asymptotique du premier nombre de Betti d'une surface algébrique réelle de tridegré $(d_1, d_2, 2)$ dans $(\mathbb{CP}^1)^3$. Si $\mathcal{S}_{d_1,d_2}$ désigne l'ensemble des surfaces algébriques réelles non singulières de tridegré $(d_1, d_2, 2)$ dans $(\mathbb{CP}^1)^3$, alors en utilisant l'inégalité de Smith-Thom et une des deux inégalités de Comessatti, on obtient

$$\max_{X \in \mathcal{S}_{d_1,d_2}} b_1(\mathbb{R}X) \leq 7d_1d_2 - 3d_1 - 3d_2 + 5.$$

On montre alors le résultat suivant.

Théorème. *Il existe une famille $(X_{k,l})$ de surfaces algébriques réelles de degré $(2k, 2l, 2)$ dans $(\mathbb{CP}^1)^3$, et $A, B, c, d, e \in \mathbb{Z}$ tels que pour tout $k \geq A$ et pour tout $l \geq B$, on ait*

$$b_1(\mathbb{R}X_{k,l}) \geq 7(2k)(2l) - c(2k) - d(2l) + e.$$

Pour montrer ces deux théorèmes, on développe une méthode de construction de surfaces algébriques réelles de tridegré $(2k, 2l, 2)$ dans $(\mathbb{CP}^1)^3$. On montre tout d'abord qu'une telle surface peut être obtenue comme petite déformation d'un revêtement double ramifié de l'éclatement de $(\mathbb{CP}^1)^2$ en $2kl$ points $p_1, \cdots, p_{2kl}$ situés sur l'intersection de deux courbes algébriques réelles de bidegré (k, l) dans $(\mathbb{CP}^1)^2$. Le lieu de ramification est la transformée stricte par l'éclatement d'une courbe algébrique réelle de bidegré $(4k, 4l)$ dans $(\mathbb{CP}^1)^2$ avec un point double en chaque p_i, pour $1 \leq i \leq 2kl$. Pour construire ces courbes, on recolle des triplets (C_i, L_i, M_i), où C_i est une courbe avec des points doubles situés sur l'intersection $L_i \cap M_i$. Pour effectuer de tels recollements, on s'est inspiré de la preuve du théorème du patchwork pour des courbes singulières (voir [Shu98]).

Chapter 2

Preliminaries

2.1 Toric varieties and polytopes

In this section, we recall the definition of a toric variety associated to a polytope and some basic definitions for polytopes and subdivisions. More details about toric varieties can be found in [Ful93] and [GKZ08].

Definition 2.1.1. *A toric variety is an irreducible complex algebraic variety equipped with an action of an algebraic torus* $(\mathbb{C}^*)^n$ *having an open dense orbit.*

Definition 2.1.2. *An integer convex polytope in* $\mathbb{R}^n$ *is the convex hull of a finite subset of* $\mathbb{Z}^n \subset \mathbb{R}^n$.

For $z = (z_1, \cdots, z_n) \in (\mathbb{C}^*)^n$ and $w = (w_1, \cdots, w_n) \in \mathbb{Z}^n$, put $z^w = z_1^{w_1} \cdots z_n^{w_n}$. Put $\mathbb{R}_+ = \{x \in \mathbb{R} \mid x \geq 0\}$ and $\mathbb{R}_+^* = \{x \in \mathbb{R} \mid x > 0\}$. Let $\Delta \subset \mathbb{R}^n$ be an integer convex polytope and $N = \#(\Delta \cap \mathbb{Z}^n) - 1$. Denote by $w_0, \cdots, w_N$ the integer points of Δ.

Definition 2.1.3. *The toric variety associated to* Δ*, denoted by* $Tor(\Delta)$*, is the closure of the set*

$$\{[z^{w_0} : \cdots : z^{w_N}] \mid z \in (\mathbb{C}^*)^n\} \subset \mathbb{CP}^N.$$

Remark 2.1.4. *The most standard definition of a toric variety associated to a polytope is in general different, see for example [Ful93]. Both definitions coincide if the integral points in the polytope affinely generate the lattice* $\mathbb{Z}^n$.

The action of the torus $(\mathbb{C}^*)^n$ on $Tor(\Delta)$ is given by the formula

$$z \cdot [y_0 : \cdots : y_N] = [z^{w_0} y_0 : \cdots : z^{w_N} y_N],$$

and $Tor(\Delta)$ is the closure of the orbit of the point $[1 : \cdots : 1]$ under this action. The dimension of $Tor(\Delta)$ is equal to the dimension of the polytope Δ.

Remark 2.1.5. *Let* Γ *be a face of* Δ*, and let* $w_{i_0}, \cdots, w_{i_s}$ *be the integer points of* Γ*. Consider the following embedding of* $\mathbb{CP}^s$ *into* $\mathbb{CP}^N$*:*

$$\begin{array}{rccc} \Phi_{N,s} & : & \mathbb{CP}^s & \to & \mathbb{CP}^N \\ & & [y_0 : \cdots : y_s] & \mapsto & [0 : \cdots : y_0 : \cdots : y_s : \cdots : 0], \end{array}$$

where on the right hand side, the variable y_j *is in position* i_j*. The map* $\Phi_{N,s}$ *gives rise to an embedding of* $Tor(\Gamma)$ *into* $Tor(\Delta)$ *. In particular, any vertex of* Δ *gives a point in* $Tor(\Delta)$.

Definition 2.1.6. *The standard real structure $conj_\Delta$ on $Tor(\Delta)$ is the restriction to $Tor(\Delta)$ of the conjugation $conj_N$ on $\mathbb{CP}^N$, where*

$$\begin{array}{rccc} conj_N & : & (\mathbb{CP})^N & \to & (\mathbb{CP})^N \\ & & [y_0 : \cdots : y_N] & \mapsto & [\overline{y_0} : \cdots : \overline{y_N}] \,. \end{array}$$

Example 2.1.7. *The unit n-simplex is the convex hull in $\mathbb{R}^n$ of the points $e_i \in \mathbb{R}^n$, for $0 \leq i \leq n$, where*

$$\begin{aligned} e_0 &= (0, 0, \cdots, 0), \\ e_1 &= (1, 0, \cdots, 0), \\ &\vdots \\ e_n &= (0, 0, \cdots, 1). \end{aligned}$$

If Δ denotes the unit n-simplex, then $Tor(\Delta) = \mathbb{CP}^n$ and $conj_\Delta = conj_n$. The unit cube in $\mathbb{R}^3$ is the convex hull of the points $(0,0,0)$, $(1,0,0)$, $(0,1,0)$, $(0,0,1)$, $(1,1,0)$, $(1,0,1)$, $(0,1,1)$ and $(1,1,1)$. If Δ denotes the unit cube in $\mathbb{R}^3$, then $Tor(\Delta)$ is the closure of the set

$$\left\{[1 : z_1 : z_2 : z_3 : z_1z_2 : z_1z_3 : z_2z_3 : z_1z_2z_3] \mid (z_1, z_2, z_3) \in (\mathbb{C}^*)^3\right\} \subset \mathbb{CP}^7.$$

It implies that

$$Tor(\Delta) = \left\{[y_0 : \cdots : y_7] \in \mathbb{CP}^7 \mid y_1y_2 = y_0y_4 \,;\, y_1y_3 = y_0y_5 \,;\, y_2y_3 = y_0y_6 \,;\, y_1y_5 = y_0y_7\right\}.$$

One can see via the Segre embedding of $(\mathbb{CP}^1)^3$ into $\mathbb{CP}^7$ that

$$(Tor(\Delta), conj_\Delta) \simeq \left((\mathbb{CP}^1)^3, conj_1 \times conj_1 \times conj_1\right).$$

For $n \geq 0$, let Σ_n be the toric surface associated to the polytope

$$Conv\left((0,0), (n+1, 0), (0,1), (1,1)\right).$$

The surface Σ_n is the so-called nth Hirzebruch surface (see for example [Bea83]). For example, $\Sigma_0 = \mathbb{CP}^1 \times \mathbb{CP}^1$. The real part of Σ_n under the standard real structure is a torus if n is even and a Klein bottle if n is odd.

Definition 2.1.8. *Let $f = \sum a_i z^i$ be a polynomial in $\mathbb{C}[z_1, \cdots, z_n]$. The convex hull of the set $\{i \in \mathbb{Z}^n \mid a_i \neq 0\}$ is called the Newton polytope of f. For an integer convex polytope Δ, denote by $\mathcal{P}(\Delta)$ the space of polynomials with Newton polytope Δ.*

Let Δ be an integer convex polytope in $(\mathbb{R}_+)^n$ and let $w_0, \cdots, w_N$ be the integer points of Δ. Let $f = \sum_{i=0,\cdots,N} a_i z^{w_i} \in \mathcal{P}(\Delta)$. The polynomial f defines an algebraic hypersurface in $Tor(\Delta)$. In fact, on $Tor(\Delta)$, the polynomial f is the restriction of a linear form $\sum_{i=0,\cdots,N} a_i y_i$, where the y_i are homogeneous coordinates in $\mathbb{CP}^N$. If $\dim(\Delta) = n$, this hypersurface is a compactification of $Z(f) = \{x \in (\mathbb{C}^*)^n \mid f(x) = 0\}$.

Definition 2.1.9. *Let $f = \sum a_i x^i \in \mathcal{P}(\Delta)$. Let $\Gamma \subset \mathbb{Z}^n$ be a subset of Δ. The truncation of f to Γ is the polynomial f^Γ defined by $f^\Gamma = \sum_{i \in \Gamma} a_i x^i$.*

Definition 2.1.10. *A polynomial $f \in \mathcal{P}(\Delta)$ is called torically nonsingular if for any face Γ of Δ (including Δ itself), the hypersurface $Z(f^\Gamma) = \{x \in (\mathbb{C}^*)^n \mid f^\Gamma(x) = 0\}$ is nonsingular.*

Let $f \in \mathcal{P}(\Delta)$, where $\Delta \subset (\mathbb{R}_+)^n$ is of dimension n. Consider the compactification $\overline{Z(f)}$ of $Z(f)$ in $Tor(\Delta)$. If the coefficients of f are real numbers, then $\overline{Z(f)}$ is a real algebraic variety in $(Tor(\Delta), conj_\Delta)$. The compactification $\overline{Z(f)}$ has some nice properties. For example, if f is torically nonsingular, then for any face Γ of Δ, the set $\overline{Z(f)}$ is transversal to $Tor(\Gamma)$ (see [Kho78]).

Definition 2.1.11. *A subdivision of an integer convex polytope Δ is a set of integer convex polytopes $(\Delta_i)_{i\in I}$ such that:*

- $\cup_{i\in I}\Delta_i = \Delta$,
- *if $i, j \in I$, then the intersection $\Delta_i \cap \Delta_j$ is a common face of the polytope Δ_i and the polytope Δ_j, or empty.*

A subdivision $(\Delta_i)_{i\in I}$ is called a triangulation if every polytope Δ_i is a simplex. A subdivision $\cup_{i\in I}\Delta_i$ of Δ is said to be convex if there exists a convex piecewise-linear function $\nu : \Delta \to \mathbb{R}$ whose domains of linearity coincide with the polytopes Δ_i.

Definition 2.1.12. *The integer volume of an integer convex n-dimensional polytope in $\mathbb{R}^n$ is equal to $n!$ times its Euclidean volume. An n-dimensional integer simplex in $\mathbb{R}^n$ is called maximal if it does not contain other integer points than its vertices. A maximal simplex is called primitive if its integer volume is equal to 1 and elementary if its integer volume is odd.*

Definition 2.1.13. *A triangulation of an integer convex n-dimensional polytope in $\mathbb{R}^n$ is called maximal (resp., primitive) if all n-dimensional simplices in the triangulation are maximal (resp., primitive).*

Definition 2.1.14. *The star of a face F in a triangulation τ, denoted by $st(F)$, is the union of all simplices in τ which have F as face.*

Definition 2.1.15. *We say that an edge λ of a triangulation of an integer convex polytope is of length k if λ contains $k+1$ integer points.*

Definition 2.1.16. *Let τ be a triangulation of an integer convex polytope containing an edge λ of length 2. Suppose that λ is the only edge of length greater than 1 in $st(\lambda)$. The refined triangulation is obtained by adding the middle point of λ to the set of vertices of τ and by subdividing each tetrahedron in $st(\lambda)$ accordingly.*

2.2 Viro's method

Viro's method is a powerful tool for constructing real algebraic varieties with prescribed topology. In this section, we present three versions of this method: the *combinatorial patchworking* also called *T-construction*, the general Viro's method and finally a generalisation for certain classes of singular varieties, proposed by Shustin in [Shu98].

2.2.1 T-construction

Let $(u_1, \cdots, u_n)$ be coordinates in $\mathbb{R}^n$, and let Δ be an integer convex n-dimensional polytope in $\mathbb{R}^n_+$. We consider the toric variety $Tor(\Delta)$ equipped with its standard real structure. Take a triangulation τ of Δ, and a distribution of signs at the vertices of τ. Denote the sign at any vertex $(i_1, \cdots, i_n)$ by $\delta_{i_1,\cdots,i_n}$. For $\varepsilon = (\varepsilon_1, \cdots, \varepsilon_n) \in (\mathbb{Z}/2\mathbb{Z})^n$, let s_ε be the symmetry of $\mathbb{R}^n$ defined by

$$s_\varepsilon(u_1, \cdots, u_n) = ((-1)^{\varepsilon_1}u_1, \cdots, (-1)^{\varepsilon_n}u_n).$$

Denote by Δ_* the union

$$\bigcup_{\varepsilon\in(\mathbb{Z}/2\mathbb{Z})^n} s_\varepsilon(\Delta).$$

Extend the triangulation τ to a symmetric triangulation of Δ_*, and the distribution of signs $\delta_{i_1,\cdots,i_n}$ to a distribution of signs at the vertices of the extended triangulation using the following formula:

$$\delta_{s_\varepsilon(i_1,\cdots,i_n)} = \left(\prod_{j=1}^{n}(-1)^{\varepsilon_j i_j}\right)\delta_{i_1,\cdots,i_n}.$$

If a simplex T of the triangulation of Δ_* has vertices of different signs, denote by S_T the convex hull of the middle points of the edges of T having endpoints of opposite signs. Denote by S the union of all such S_T. It is an $(n-1)$-dimensional piecewise-linear manifold contained in Δ_*. If Γ is a face of Δ_*, then, for all integer vectors α orthogonal to Γ and for all $x \in \Gamma$, identify x with $s_\alpha(x)$. Denote by $\hat{\Delta}$ the quotient of Δ_* under these identifications, and denote by π_Δ the quotient map. The real part $\mathbb{R}\,Tor(\Delta)$ of $Tor(\Delta)$ is homeomorphic to $\hat{\Delta}$.

Theorem 2.2.1. (*O. Viro*)
Assume the triangulation τ of Δ is convex. Then, there exists a torically nonsingular real polynomial $f \in \mathcal{P}(\Delta)$ such that the pairs $(\mathbb{R}\,Tor(\Delta), \mathbb{R}X)$ and $\left(\hat{\Delta}, \pi_\Delta(S)\right)$ are homeomorphic, where X denotes the closure in $Tor(\Delta)$ of the zero set of f.

A polynomial $f \in \mathcal{P}(\Delta)$ defining such an hypersurface X can be written down explicitly. If $t > 0$ is sufficiently small, put

$$f(x) = \sum_{i\in V} \delta_i x^i t^{\nu(i)}, \tag{2.1}$$

where V is the set of vertices of τ and ν is a function ensuring the convexity of τ.

Definition 2.2.2. *A polynomial of the form (2.1) is called a Viro polynomial, and a hypersurface defined by such a polynomial (for sufficiently small $t > 0$) is called a T-hypersurface.*

Euler characteristic of the real part of a nonsingular T-surface

Let Δ be an integer convex n-dimensional polytope in $\mathbb{R}^n_+$. Suppose that the only singularities of $Tor(\Delta)$ come from the vertices of Δ (see Remark 2.1.5). Thus, one can see from the torically nonsingular condition that any T-hypersurface in $Tor(\Delta)$ is nonsingular. The real part of a T-hypersurface in $Tor(\Delta)$ admits a cellular decomposition coming from the triangulation of $\hat{\Delta}$. This cellular decomposition allows one to compute the Euler characteristic of the real part.

Proposition 2.2.3. (*see [Ite97] and [Ber02]*)
Suppose that the only singularities of $Tor(\Delta)$ come from the vertices of Δ and that Δ admits a primitive convex triangulation τ. Let $D(\tau)$ be any distribution of signs and Z be a T-surface obtained from $(\tau, D(\tau))$. Then

$$\chi(\mathbb{R}Z) = \sigma(\mathbb{C}Z),$$

where

$$\sigma(\mathbb{C}Z) = \sum_{p+q=0 \mod 2} (-1)^p h^{p,q}(\mathbb{C}Z).$$

If the dimension of Z is even, then $\sigma(\mathbb{C}Z)$ is the signature of $\mathbb{C}Z$.

Suppose now that Δ is an integer convex 3-dimensional polytope in $\mathbb{R}^3_+$.

Proposition 2.2.4. (*see [Bih01]*)
Suppose that the only singularities of $Tor(\Delta)$ come from the vertices of Δ and let τ be a maximal convex triangulation of Δ. Given a distribution of signs $D(\tau)$ at the vertices of τ, denote by N (resp., P) the set of simplices of even volume in τ with negative (resp., positive) product of signs at the vertices. Let E be the set of elementary simplices in τ. Let Z be a T-surface obtained from $(\tau, D(\tau))$. Then

$$\chi(\mathbb{R}Z) = \sigma(\mathbb{C}Z) + \sum_{T \text{ simplices in } \tau} (Vol(T) - \varepsilon_T),$$

where $\varepsilon_T = 0, 1, 2$ if $T \in N, E, P$ respectively.

Proposition 2.2.5. (*see [Bih01]*)
Suppose that Δ admits a convex triangulation τ with an edge λ of length 2 (with middle point a) such that λ is the only edge of length greater than 1 in $st(\lambda)$. Denote by k the dimension of the minimal face of Δ containing λ. Denote by τ_a the refined triangulation (see Definition 2.1.16). Let $D(\tau)$ be any distribution of signs at the vertices of τ and extend it to $D(\tau_a)$ choosing any sign of a. Let P_a be the set of simplices in $st(a)$ which are of even volume and positive product of signs at the vertices. Let E_a be the set of elementary simplices in $st(a)$. Denote by Z, resp. Z_a, a T-surface obtained from $(\tau, D(\tau))$, resp. $(\tau_a, D(\tau_a))$.
If the endpoints of λ have opposite signs, then $\chi(\mathbb{R}Z) = \chi(\mathbb{R}Z_a)$, and

$$\chi(\mathbb{R}Z) - \chi(\mathbb{R}Z_a) = \#(E_a) + 2\#(P_a) - 2^k,$$

otherwise.

2.2.2 General Viro's method

The T-construction is a particular case of a more general construction, called *Viro's patchworking* or *Viro's method*. In this construction, we glue together more complicated pieces than before. These pieces are called *charts of polynomials*.

Definition 2.2.6. *Let $\Delta \subset (\mathbb{R}_+)^n$ be an integer convex n-dimensional polytope. Let $f \in \mathcal{P}(\Delta)$, and let $Z(f)$ be the set $\{x \in (\mathbb{R}^*)^n |\ f(x) = 0\}$. In the orthant $(\mathbb{R}^*_+)^n$, we define ϕ as*

$$\begin{array}{rcccc} \phi & : & (\mathbb{R}^*_+)^n & \to & (\mathbb{R}^*)^n \\ & & z & \mapsto & \dfrac{\sum_{i \in \Delta \cap \mathbb{Z}^n} \mid z^i \mid i}{\sum_{i \in \Delta \cap \mathbb{Z}^n} \mid z^i \mid}. \end{array}$$

In the octant $s_\varepsilon((\mathbb{R}^*_+)^n)$, we put

$$\phi(s_\varepsilon(z)) = s_\varepsilon(\phi(z)),$$

where $s_\varepsilon(x_1, \cdots, x_n) = ((-1)^{\varepsilon_1} x_1, \cdots, (-1)^{\varepsilon_n} x_n)$.
We call chart of f the closure of $\phi(Z(f))$ in Δ_*. Denote by $C(f)$ the chart of f.

Let Δ be an integer convex n-dimensionnal polytope in $\mathbb{R}^n_+$ and let $\cup_{i\in I}\Delta_i$ be a subdivision of Δ. For any $i \in I$, take a polynomial f_i such that the polynomials f_i verify the following properties:

- for each $i \in I$, one has $f_i \in \mathcal{P}(\Delta_i)$,
- if $\Gamma = \Delta_i \cap \Delta_j$, then $f_i^\Gamma = f_j^\Gamma$,
- for each $i \in I$, the polynomial f_i is torically nonsingular.

The polynomials f_i define a unique polynomial $f = \sum_{w\in\Delta\cap\mathbb{Z}^n} a_w x^w$, such that $f^{\Delta_i} = f_i$ for all $i \in I$.

Theorem 2.2.7. (*O. Viro*)
Assume that the subdivision $\cup_{i\in I}\Delta_i$ of Δ is convex and let $\nu : \Delta \to \mathbb{R}$ be a function certifying its convexity. Define the associated Viro polyomial $f_t = \sum_{w\in\Delta\cap\mathbb{Z}^n} a_w t^{\nu(w)} x^w$. Then, there exists $t_0 > 0$ such that if $0 < t < t_0$, then f_t is torically nonsingular and the pairs $\left(\hat{\Delta}, \pi_\Delta(C(f_t))\right)$ and $\left(\hat{\Delta}, \pi_\Delta(\cup_{i\in I}C(f_i))\right)$ are homeomorphic.

For more details about the general Viro's method, see for example [Vir84] or [Ris93].

2.2.3 Gluing of singular points

Here we follow [Shu98]. Another reference is the book [IMS09]. The term *singular point* of a polynomial f in n variables means a singular point of the hypersurface $\{f = 0\} \cap (\mathbb{C}^*)^n$. We study real polynomials with only finitely many singular points. Denote by $\mathrm{Sing}(f)$ the set of singularities of f. Let us be given a certain classification $\mathcal{S}$ of isolated hypersurface singularities which are invariant with respect to the transformations

$$f(z_1, \cdots, z_n) \to \lambda_0 f(\lambda_1 z_1, \cdots, \lambda_n z_n),$$

where $\lambda_0, \cdots, \lambda_n > 0$. In addition, assume that in each type of the classification, the Milnor number is constant. For a polynomial f, denote by $\mathcal{S}(f)$ the function

$$\begin{array}{rcccl} \mathcal{S}(f) & : & \mathcal{S} & \longrightarrow & \mathbb{Z} \\ & & s & \mapsto & \#\left\{z \in (\mathbb{C}^*)^n \mid z \text{ is in } \mathrm{Sing}(f) \text{ of type } s\right\}. \end{array}$$

Definition 2.2.8. *A polynomial $f \in \mathcal{P}(\Delta)$ is called peripherally nonsingular (PNS) if for every proper face $\Gamma \subset \Delta$, the hypersurface $Z(f^\Gamma) = \{x \in (\mathbb{C}^*)^n \mid f^\Gamma(x) = 0\}$ is nonsingular.*

Definition 2.2.9. *Let $f \in \mathcal{P}(\Delta)$ and $\partial\Delta_+ \subset \partial\Delta$ be the union of some facets of Δ. Put*

$$\mathcal{P}(\Delta, \partial\Delta_+, f) = \left\{g \in \mathcal{P}(\Delta) \mid g^\Gamma = f^\Gamma \quad \text{for any facet} \quad \Gamma \subset \partial\Delta_+\right\}.$$

Definition 2.2.10. *Let f be a polynomial with only finitely many singular points and let $v_1, \cdots, v_m$ be all the singular points of f. In the space $\Sigma(d)$ of polynomials of degree less than d, for $d \geq \deg f$, consider a germ $M_d(f)$ at $f \in \Sigma(d)$ of the variety of polynomials with singular points in neighborhoods of the points $v_1, \cdots, v_m$ of the same types. The triad $(\Delta, \partial\Delta_+, f)$ is said to be S-transversal if*

- *for $d \geq d_0$, the germ $M_d(f)$ is smooth and its codimension in $\Sigma(d)$ does not depend on d.*
- *the intersection of $M_d(f)$ and $\mathcal{P}(\Delta, \partial\Delta_+, f)$ in $\Sigma(d)$ is transversal for $d \geq d_0$.*

Remark 2.2.11. *Instead of types of isolated singular points one can consider other properties of polynomials which can be localized, are invariant under the torus action, and the corresponding strata are smooth. Then one can speak of the respective transversality in the sense of Definition 2.2.10, and prove a patchworking theorem similar to that discussed below.*

General gluing theorem

Let Δ be an integer convex n-dimensionnal polytope in $\mathbb{R}^n_+$, and let $\cup_{i\in I}\Delta_i$ be a subdivision of Δ. For any $i \in I$, take a polynomial f_i such that the polynomials f_i verify the following properties:

- for each $i \in I$, one has $f_i \in \mathcal{P}(\Delta_i)$,
- if $\Gamma = \Delta_i \cap \Delta_j$, then $f_i^\Gamma = f_j^\Gamma$,
- for each $i \in I$, the polynomial f_i is PNS.

The polynomials f_i define an unique polynomial $f = \sum_{w\in\Delta\cap\mathbb{Z}^n} a_w x^w$, such that $f^{\Delta_i} = f_i$ for all $i \in I$. Let G be the adjacency graph of the subdivision $\cup_{i\in I}\Delta_i$. Define $\mathcal{G}$ to be the set of oriented graphs Γ with support G and without oriented cycles. For $\Gamma \in \mathcal{G}$, denote by $\partial\Delta_{i,+}$ the union of facets of Δ_i, which correspond to the arcs of Γ coming in Δ_i.

Theorem 2.2.12 (Shustin, see [Shu98])**.** *Assume that the subdivision $\cup_{i\in I}\Delta_i$ of Δ is convex and that there exists $\Gamma \in \mathcal{G}$ such that the triad $(\Delta_i, \partial\Delta_{i,+}, f_i)$ is S-transversal. Then, there exists a PNS polynomial $f \in \mathcal{P}(\Delta)$ such that*

$$\mathcal{S}(f) = \sum_{i\in I} \mathcal{S}(f_i),$$

and the triad $(\Delta, \emptyset, f)$ is S-transversal.

Remark 2.2.13. *Let $\nu : \Delta \to \mathbb{R}$ be a function certifying the convexity of the subdivision of Δ. Then, the polynomial f can be chosen of the form f_{t_0}, for t_0 positive and small enough, where*

$$f_t = \sum_{i\in\Delta\cap\mathbb{Z}^n} A_i(t) t^{\nu(i)} z^i,$$

and $|A_i(t) - a_i| \leq Kt$, for a positive constant K. The polynomial f_t is a modified version of Viro polynomial. Suppose that the polynomials f_i are real. Then, the polynomial f_t can also be chosen real and as in Viro's theorem, for t positive and small enough, the pairs $\left(\hat{\Delta}, \pi_\Delta(C(f_t))\right)$ and $\left(\hat{\Delta}, \pi_\Delta(\bigcup_{i\in I} C(f_i))\right)$ are homeomorphic.

S-transversality criterion

Let $n = 2$, i.e., polynomials f_i define curves in toric surfaces. In [Shu98], Shustin defined a non-negative integer topological invariant $b(w)$ of isolated planar curve singular points w such that, if f_i is irreducible and

$$\sum_{w\in\mathrm{Sing}(f_i)} b(w) < \sum_{\sigma\not\subset\partial\Delta_{i,+}} \mathrm{length}(\sigma),$$

then the triple $(\Delta_i, \partial\Delta_{i,+}, f_i)$ is S-transversal. Here, $\mathrm{length}(\sigma)$ denotes the integer length of σ. Recall that

- if w is a node, then $b(w) = 0$,

- if w is a cusp, then $b(w) = 1$,

Example 2.2.14. *If under the hypotheses of Theorem 2.2.12, $n = 2$, the curves*

$$\overline{\{f_i = 0\}} \subset Tor(\Delta_i),$$

$i \in I$, are irreducible and have only ordinary nodes as singularities, then there is an oriented graph $\Gamma \in \mathcal{G}$ such that all the triples $(\Delta_i, \partial\Delta_{i,+}, f_i)$ are transversal. Indeed, for any common edge $\sigma \subset \Delta_i \cap \Delta_j$, one can choose the corresponding arc of Γ to be orthogonal to σ. Then orient the arcs of Γ so that they form angles in the interval $\left]-\frac{\pi}{2}, \frac{\pi}{2}\right]$ with the horizontal axis. Then

$$\partial\Delta_{i,+} \neq \partial\Delta_i,$$

for $i \in I$. The above criterion implies transversality.

2.3 Basic tropical geometry

One of the origins of tropical geometry is Viro's combinatorial patchworking (see [Vir01]). In this section, we recall basic definitions and standard results in tropical geometry. We only consider tropical varieties in $\mathbb{R}^n$. More details about tropical varieties can be found in [Mik06] or [BIMS].

2.3.1 Integer polyhedral complexes

Definition 2.3.1. *A rational convex polyhedron in $\mathbb{R}^n$ is the set defined by a finite number of inequalities of the type*

$$< j\,, x > \leq \ c,$$

where $x \in \mathbb{R}^n$, $j \in \mathbb{Z}^n$, $c \in \mathbb{R}$ and $<\,,\,>$ denotes the standard scalar product on $\mathbb{R}^n$.

Definition 2.3.2. *A finite rational polyhedral complex Z of dimension k in $\mathbb{R}^n$ is the union of a finite collection of rational convex polyhedra of dimension k, called the facets of Z, such that the intersection $\cap_{j=1}^{l} P_j$ of any finite number of facets is the common face of the polyhedra P_j. We may equip the facets of X with natural numbers called the weights. In this case, we say that Z is a weighted finite rational polyhedral complex.*

A weighted finite rational polyhedral complex Z of dimension k in $\mathbb{R}^n$ is called *balanced* if the following condition holds.

Condition 2.3.3. *Let Q be a face of dimension $k-1$, and let $P_1, \cdots, P_l$ be the facets adjacent to Q. Let $\Lambda_{P_i} \subset \mathbb{Z}^n$ denote the lattice parallel to P_i, (analogously for Λ_Q). Let v_i be a primitive integer vector such that, together v_i and Λ_Q generate Λ_{P_i}, and for any $x \in Q$, one has $x + \varepsilon v_i \in F_i$ for $0 < \varepsilon << 1$. We have*

$$\sum_{i=1}^{l} w_{P_i} v_i \in \Lambda_Q,$$

where w_{P_i} is the weight of the facet P_i.

Definition 2.3.4. *A tropical variety in $\mathbb{R}^n$ is a weighted finite rational polyhedral complex in $\mathbb{R}^n$ satisfying the balancing condition at any codimension 1 face.*

Definition 2.3.5. *Let $S_1 \cdots, S_k$ be k tropical varieties in $\mathbb{R}^n$. We say that the varieties S_i, $1 \leq i \leq k$, intersect transversely if every top-dimensional cell of $S_1 \cap \cdots \cap S_k$ is a transverse intersection $\cap_{i=1}^k F_i$, where F_i is a facet of S_i.*

If $S_1, \cdots, S_k$ are k tropical varieties in $\mathbb{R}^n$ intersecting transversely, one can equip the facets of $S_1 \cap \cdots \cap S_k$ with weights as follows. Suppose that a facet $B \subset S_1 \cap \cdots \cap S_k$ is the intersection of facets $F_j \subset S_j$, for $1 \leq j \leq k$. Let $\Lambda_j \subset \mathbb{Z}^n$ be the subgroup consisting of all integer vectors parallel to F_j, for $1 \leq j \leq k$. The weight of B is defined as the product of the weights of $F_1, \cdots, F_k$ with the index of $\Lambda_1 + \cdots + \Lambda_k \subset \mathbb{Z}^n$. One can see that with this definition of weights, the set $S_1 \cap \cdots \cap S_k$ is a tropical variety. More generally, one can define the *stable intersection* for any tropical varieties X and Y (see [RGST05] for the case of curves in $\mathbb{R}^2$, and [Mik06] for the general case). The result, denoted by $X \cdot Y$ is a tropical variety of codimension $\mathrm{codim}(X) + \mathrm{codim}(Y)$, and if X and Y intersect transversely, then $X \cdot Y = X \cap Y$.

2.3.2 Tropical hypersurfaces

Tropical hypersurfaces can be described as algebraic varieties over the *tropical semi-field* $(\mathbb{T}, \text{“}+\text{”}, \text{“}\times\text{”})$, where $\mathbb{T} = \mathbb{R} \cup \{-\infty\}$ and for any two elements a and b in $\mathbb{T}$, one has

$$\text{“}a + b\text{”} = \max(a, b) \text{ and } \text{“}a \times b\text{”} = a + b.$$

A tropical polynomial is a tropical sum of monomials, for a polynomial P in n variables we get

$$P(x) = \text{“}\sum a_i x^i\text{”} = \max(< x, i > + a_i),$$

where $P : \mathbb{T}^n \longrightarrow \mathbb{T}$, $x = (x_1, \cdots, x_n) \in \mathbb{T}^n$, $i = (i_1, \cdots, i_n) \in \mathbb{N}^n$, $x^i = x^{i_1} \cdots x^{i_n}$, and $a_i \in \mathbb{T}$. Denote by $\Delta(P) = Conv\,(i \in \mathbb{N}^n \mid a_i \neq -\infty)$ the counterpart of the classical Newton polytope. Denote by $V_0(P)$ the set of points x in $\mathbb{R}^n$ for which the value of $P(x)$ is given by at least two monomials. This is an $(n-1)$-dimensional finite rational polyhedral complex, which induces a subdivision of $\mathbb{R}^n$. Given a face F of this subdivision, and a point $x \in \overset{\circ}{F}$, where $\overset{\circ}{F}$ denotes the interior of F, define

$$\Delta_F = Conv\left(\left\{i \in \Delta(P) \mid P(x) = \text{“}a_i x^i\text{”}\right\}\right).$$

The polytopes Δ_F form a convex subdivision of $\Delta(P)$, called the *dual subdivision* of P. The polytope Δ_F is called the *dual cell* of F, and $\dim \Delta_F = n - \dim F$. In particular, if F is a facet of $V_0(P)$, then Δ_F is a segment and we define the *weight* of F by $w(F) = Card(\Delta_F \cap \mathbb{Z}^n) - 1$. Denote by $V(P)$ the polyhedral complex $V_0(P)$ equipped with the map w on its facets.

Proposition 2.3.6. (*see for example [BIMS]*)
For any tropical polynomial P in n variables, the set $V(P)$ is a tropical variety of dimension $n-1$. Reciprocally, for any tropical hypersurface S in $\mathbb{R}^n$, there exists a tropical polynomial P in n variables such that $S = V(P)$.

Definition 2.3.7. *A tropical hypersurface is nonsingular if the dual subdivision of its Newton polytope is a primitive triangulation.*

2.3.3 Amoebas and patchworking

In this section, we give a tropical formulation of the combinatorial patchworking theorem for nonsingular tropical hypersurfaces (see Theorem 2.2.1) and complete intersections of nonsingular hypersurfaces (see 2.3.22 and [Stu94]). Amoebas appear as a fundamental link between classical algebraic geometry and tropical geometry.

Definition 2.3.8. *Let $V \subset (\mathbb{C}^*)^n$ be an algebraic variety. Its amoeba (see [GKZ08]) is the set $\mathcal{A} = \mathrm{Log}(V) \subset \mathbb{R}^n$, where $\mathrm{Log}\,(z_1, \cdots, z_n) = (\log|z_1|, \cdots, \log|z_n|)$. Similarly, we may consider the map*

$$\begin{array}{rccc} \mathrm{Log}_t & : & (\mathbb{C}^*)^n & \to & \mathbb{R}^n \\ & & (z_1 \cdots, z_n) & \mapsto & \left(\dfrac{\log|z_1|}{\log t}, \cdots, \dfrac{\log|z_n|}{\log t}\right), \end{array}$$

for $t > 1$.

Definition 2.3.9. *Let X and Y be two non-empty compact subsets of a metric space (M, d). Define their Hausdorff distance $\mathrm{d}_H(X, Y)$ by*

$$\mathrm{d}_H(X, Y) = \max\left\{\sup_{x\in X}\inf_{y\in Y} \mathrm{d}(x, y),\ \sup_{y\in Y}\inf_{x\in X} \mathrm{d}(x, y)\right\}.$$

Theorem 2.3.10. *(Mikhalkin [Mik04], Rullgard [Rul01])*
Let $P(x) =$ "$\sum_{i\in\Delta\cap\mathbb{Z}^n} a_i x^i$" be a tropical polynomial in n variables. Let

$$f_t = \sum_{i\in\Delta\cap\mathbb{Z}^n} A_i(t) t^{a_i} z^i$$

be a family of complex polynomials and suppose that $A_i(t) \sim \gamma_i$ when t goes to $+\infty$ with $\gamma_i \in \mathbb{C}^*$. Denote by $Z(f_t)$ the zero-set of f_t in $(\mathbb{C}^*)^n$ and by $V(P)$ the tropical hypersurface associated to P. Then for any compact $K \subset \mathbb{R}^n$,

$$\lim_{t\to+\infty} \mathrm{Log}_t(Z(f_t)) \cap K = V(P) \cap K,$$

with respect to the Hausdorff distance. We say that the family $Z(f_t)$ is an approximating family of the hypersurface $V(P)$.

Remark 2.3.11. *Consider $A_i(t) \in \{\pm 1\}$, for $i \in \Delta \cap \mathbb{Z}^n$. Then, the polynomial f_t is a Viro polynomial (see Definition 2.2.2).*

To give a tropical formulation of the combinatorial patchworking theorem for nonsingular tropical hypersurfaces, we need to introduce the notion of a real phase for a nonsingular tropical hypersurface in $\mathbb{R}^n$.

Definition 2.3.12. *A real phase on a nonsingular tropical hypersurface S of in $\mathbb{R}^n$ is the data for every facet F of S of 2^{n-1} n-uplet of signs $\varphi_{F,i} = (\varphi^1_{F,i}, \cdots, \varphi^n_{F,i})$, $1 \le i \le 2^{n-1}$ satisfying to the following properties:*

1. *If $1 \le i \le 2^{n-1}$ and $v = (v_1, \cdots, v_n)$ is an integer vector in the direction of F, then there exists $1 \le j \le 2^{n-1}$ such that $(-1)^{v_k}\varphi^k_{F,i} = \varphi^k_{F,j}$, for $1 \le k \le n$.*

2. *Let H be a codimension 1 face of S. Then for any facet F adjacent to H and any $1 \le i \le 2^{n-1}$, there exists a unique face $G \ne F$ adjacent to H and $1 \le j \le 2^{n-1}$ such that $\varphi_{G,j} = \varphi_{F,i}$.*

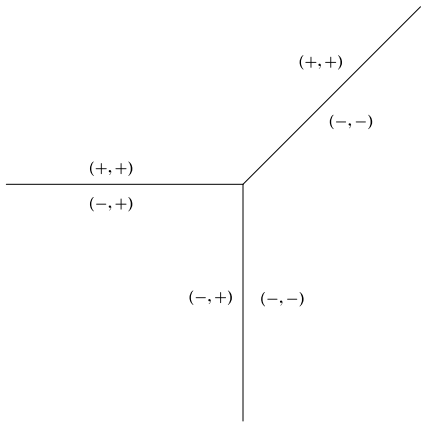

Figure 2.1 – A real tropical line.

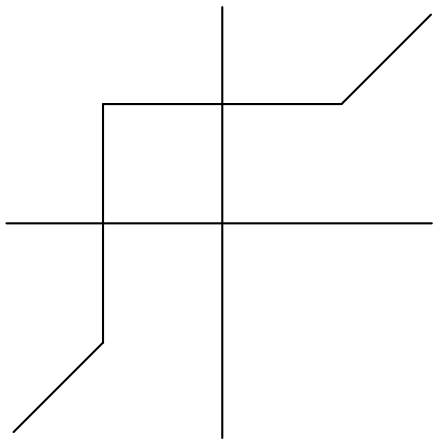

Figure 2.2 – The real part of the real tropical line depicted in Figure 2.1.

A nonsingular tropical hypersurface equipped with a real phase is called a nonsingular real tropical hypersurface.

Example 2.3.13. *In Figure 2.1, we depicted a real tropical line.*

Remark 2.3.14. *In the case of nonsingular tropical curves in $\mathbb{R}^2$, a real phase can also be described in terms of a ribbon structure (see [BIMS]).*

Definition 2.3.15. *For any rational convex polyhedron F in $\mathbb{R}^n$ defined by N inequalities*

$$< j_1, x > \leq c_1, \cdots, < j_N, x > \leq c_N,$$

where $j_1 \cdots j_N \in \mathbb{Z}^N$ and $c_1, \cdots, c_N \in \mathbb{R}$, denote by $F^{\exp}$ the rational convex polyhedron in $(\mathbb{R}_+^*)^n$ defined by the inequalities

$$< j_1, x > \leq \exp(c_1), \cdots, < j_N, x > \leq \exp(c_N).$$

Reciprocally for any rational convex polyhedron F in $(\mathbb{R}_+^*)^n$ defined by the inequalities

$$< k_1, x > \leq d_1, \cdots, < k_N, x > \leq d_N,$$

where $k_1 \cdots k_N \in \mathbb{Z}^N$ and $d_1, \cdots, d_N \in \mathbb{R}_+^*$, denote by $F^{\log}$ the rational convex polyhedron in $\mathbb{R}^n$ defined by the inequalities

$$< k_1, x > \leq \log(d_1), \cdots, < k_N, x > \leq \log(d_N).$$

Extend these definitions to rational polyhedral complexes.

For $\varepsilon = (\varepsilon_1, \cdots, \varepsilon_n) \in (\mathbb{Z}/2\mathbb{Z})^n$, recall that s_ε denotes the symmetry of $\mathbb{R}^n$ defined by

$$s_\varepsilon(u_1, \cdots, u_n) = ((-1)^{\varepsilon_1} u_1, \cdots, (-1)^{\varepsilon_n} u_n).$$

Let (S, φ) be a nonsingular real tropical hypersurface. Denote by $\mathcal{F}(S)$ the set of all facets of S.

Definition 2.3.16. *The real part of* (S, φ) *is*

$$\mathbb{R}S_\varphi = \bigcup_{F \in \mathcal{F}(S)} \bigcup_{1 \leq i \leq 2^{n-1}} s_{\varphi_{F,i}}\left(F^{\exp}\right).$$

Example 2.3.17. *In Figure 2.2, we depicted the real part of the real tropical line from Example 2.3.13.*

Let S be a nonsingular tropical hypersurface in $\mathbb{R}^n$ given by a tropical polynomial P, and let φ be a real structure on S. Denote by τ the dual subdivision of P.

Definition 2.3.18. *A distribution of signs* δ *at the vertices of* τ *is called compatible with* φ *if for any vertex* v *of* τ*, the following compatibility condition is satisfied.*

- *For any vertex* w *of* τ *adjacent to* v*, one has* $\delta_v \neq \delta_w$ *if and only if there exists* $1 \leq i \leq 2^{n-1}$ *such that* $\varphi_{F,i} = (+, \cdots, +)$*, where* F *denotes the facet of* S *dual to the edge connecting* v *and* w*.*

Lemma 2.3.19. *For any real phase* φ *on* S*, there exist exactly two distributions of signs at the vertices of* τ *compatible with* φ*. Reciprocally, given any distribution of signs* δ *at the vertices of* τ*, there exists a unique real phase* φ *on* S *such that* δ *is compatible with* φ*.*

Proof. Let φ be a real phase on S. Choose an arbitrary vertex v of τ and put an arbitrary sign ε at v. Given a vertex of τ equipped with a sign, define a sign at all adjacent vertices by using the compatibility condition in Definition 2.3.18. It gives a distribution of signs δ at the vertices of τ compatible with φ such that $\delta_v = \varepsilon$. In fact, let G be a face of S of codimension 1 and denote by F_1, F_2, F_3 the facets of S adjacents to G. It follows from the definition of a real phase that either $\varphi_{F_i,k} \neq (+, \cdots, +)$ for all $1 \leq i \leq 3$ and $1 \leq k \leq 2^{n-1}$, or that there exist exactly two indices $1 \leq i, j \leq 3$ and such that

$$\varphi_{F_i,k_i} = \varphi_{F_j,k_j} = (+, \cdots, +),$$

where $k_i \in \{1, \cdots, 2^{n-1}\}$ and $k_j \in \{1, \cdots, 2^{n-1}\}$. This means exactly that going over any cycle Γ made of edges of τ, the signs at the vertices of Γ change an even number of times, and the distribution of signs δ is well defined. The other distribution of signs at the vertices of τ compatible with φ is the distribution δ' defined by $\delta'(v) = -\delta(v)$, for all vertices v of τ. □

Definition 2.3.20. *Let* Δ *be a 2-dimensional polytope in* $\mathbb{R}^2_+$ *and let* τ *be a primitive triangulation of* Δ*. The Harnack distribution of signs at the vertices of* τ *is defined as follows. If* v *is a vertex of* τ *with both coordinates even, put* $\delta_v = -$*, otherwise put* $\delta_v = +$*. The real phase compatible with* δ *is called the Harnack phase. A T-curve associated to any primitive triangulation with a Harnack distribution of signs is a so-called simple Harnack curve. Simple Harnack curves have some very particular properties (see [Mik00]).*

For any nonsingular real tropical hypersurface (S, φ) and any $\varepsilon \in (\mathbb{Z}/2\mathbb{Z})^n$, put

$$\mathbb{R}S^\varepsilon_\varphi = s_\varepsilon\left(\mathbb{R}S_\varphi \cap s_\varepsilon\left((\mathbb{R}^*_+)^n\right)\right).$$

The set $\mathbb{R}S^\varepsilon_\varphi$ is a finite rational polyhedral complex in $(\mathbb{R}^*_+)^n$. The following theorem is a corollary of Theorem 2.3.10.

Theorem 2.3.21. *Let S be a nonsingular tropical hypersurface given by the tropical polynomial $P(x) = \text{“}\sum_{i\in\Delta\cap\mathbb{Z}^n} a_i x^i\text{”}$, and let τ be the dual subdivision of P. Let φ be a real phase on S and let δ be a distribution of signs at the vertices of τ compatible to δ. Put $f_t = \sum_{i\in\Delta\cap\mathbb{Z}^n} \delta_i t^{a_i} z^i$. Then, for every $\varepsilon \in (\mathbb{Z}/2\mathbb{Z})^n$ and for every compact $K \subset \mathbb{R}^n$, one has*

$$\lim_{t\to+\infty} \mathrm{Log}_t \left(Z(f_t) \cap s_\varepsilon \left((\mathbb{R}_+^*)^n\right)\right) \cap K = \left(\mathbb{R}S_\varphi^\varepsilon\right)^{\log} \cap K.$$

We say that the family $Z(f_t)$ is an approximating family of (S, φ).

The next theorem is a tropical reformulation of the combinatorial patchworking theorem for complete intersections (see [Stu94]).

Theorem 2.3.22. *Let $S_1, \cdots, S_k$ be k tropical hypersurfaces in $\mathbb{R}^n$ such that S_j is given by the tropical polynomial $P^j(x) = \text{“}\sum_{i\in\Delta_j\cap\mathbb{Z}^n} a_i^j x^i\text{”}$, for $1 \le j \le k$. Let τ^j be the dual subdivision of P^j, for $1 \le j \le k$. Assume that the $S_1, \cdots, S_k$ intersect transversely. Let φ^j be a real phase on S_j and δ^j be a distribution of signs at the vertices of τ^j compatible to δ^j, for $1 \le j \le k$. Put $f_t^j = \sum_{i\in\Delta_j\cap\mathbb{Z}^n} \delta_i^j t^{-a_i^j} z^i$. Then for every $\varepsilon \in (\mathbb{Z}/2\mathbb{Z})^n$ and for every compact $K \subset \mathbb{R}^n$, one has*

$$\lim_{t\to+\infty} \mathrm{Log}_t \left(Z(f_t^1) \cap \cdots \cap Z(f_t^k) \cap s_\varepsilon \left((\mathbb{R}_+^*)^n\right)\right) \cap K = \left(\mathbb{R}S_{1,\varphi^1}^\varepsilon\right)^{\log} \cap \cdots \cap \left(\mathbb{R}S_{k,\varphi^k}^\varepsilon\right)^{\log} \cap K.$$

We say that the family $\left(Z(f_t^1), \cdots, Z(f_t^k)\right)$ is an approximating family of

$$\left((S_1, \cdots, S_k), (\varphi^1, \cdots, \varphi^k)\right).$$

2.3.4 Tropical modifications of $\mathbb{R}^n$

Tropical modifications were introduced by Mikhalkin in [Mik06]. We recall in this section the definition of a tropical modification of $\mathbb{R}^n$ along a rational function. More details can be found in [Mik06], [BLdM12], [Sha11] and [BIMS]. Let $f : \mathbb{R}^n \to \mathbb{R}$ and $g : \mathbb{R}^n \to \mathbb{R}$ be two tropical polynomials. One may consider the rational tropical function $h = \text{“}\frac{f}{g}\text{”}$. Denote by $V(f)$ the tropical hypersurface associated to f and by $V(g)$ the tropical hypersurface associated to g.

Definition 2.3.23. *The tropical modification of $\mathbb{R}^n$ along h, denoted by $\mathbb{R}_h^n$, is the tropical hypersurface of $\mathbb{R}^{n+1}$ defined by “$x_{n+1}g(x) + f(x)$”.*

We may also describe $\mathbb{R}_h^n$ in a more geometrical way. Consider the graph Γ_h of the piecewise linear function h. It is a polyhedral complex in $\mathbb{R}^{n+1}$. Equip the graph Γ_h with the constant weight function equal to 1 on it facets. In general, this graph is not a tropical hypersurface of $\mathbb{R}^{n+1}$ as it is not balanced at faces F of codimension one. At every codimension one face F of Γ_h which fails to satisfy the balancing condition, add a new facet as follows. Denote by w the integer number such that the balancing condition is satisfied at F if we attach to F a facet F^{-1} in the $(0, \cdots, 0, -1)$-direction equipped with the weight w. If $w > 0$, attach F^{-1} (equipped with w) to F and if $w < 0$, attach to F a facet F^{+1} in the $(0, \cdots, 0, 1)$-direction equipped with the weight $-w$. If $V(f)$ and $V(g)$ intersect transversely, then the tropical modification $\mathbb{R}_h^n$ is obtained by attaching to the graph Γ_h the intervals

$$](x, -\infty), (x, h(x))]$$

for all x in the hypersurface $V(f)$, and

$$[(x, h(x)), (x, +\infty)[$$

for all x in the hypersurface $V(g)$ and by equipping each new facet with the unique weight so that the balancing condition is satisfied.

Definition 2.3.24. *The principal contraction*

$$\delta_h : \mathbb{R}^n_h \to \mathbb{R}^n$$

associated to h is the projection of $\mathbb{R}^n_h$ onto $\mathbb{R}^n$.

The principal contraction δ_h is one-to-one over $\mathbb{R}^n \setminus (V(f) \cup V(g))$.

Example 2.3.25. *In Figure 2.3, we depicted the tropical modification of $\mathbb{R}^2$ along the tropical line given by the tropical polynomial "$x + y + 0$". It is the tropical plane in $\mathbb{R}^3$ given by the tropical polynomial "$x + y + z + 0$". In Figure 2.4, we depicted the tropical*

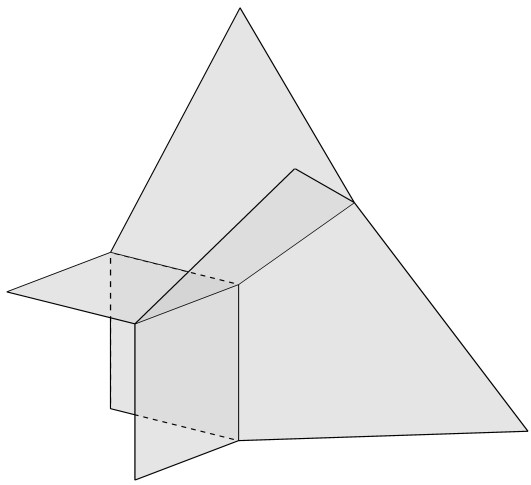

Figure 2.3 – The tropical modificiation of $\mathbb{R}^2$ along the tropical line "$x + y + 0$".

modification of $\mathbb{R}^2$ along "$\frac{P}{Q}$", where "$P = x + y + 0$" and "$Q = y + (-1)$". The tropical curves $V(P)$ and $V(Q)$ intersect transversely. In Figure 2.5, we depicted the tropical modification of $\mathbb{R}^2$ along "$\frac{P}{Q_1}$", where "$Q_1 = y + 0$". The tropical curves $V(P)$ and $V(Q)$ do not intersect transversely.

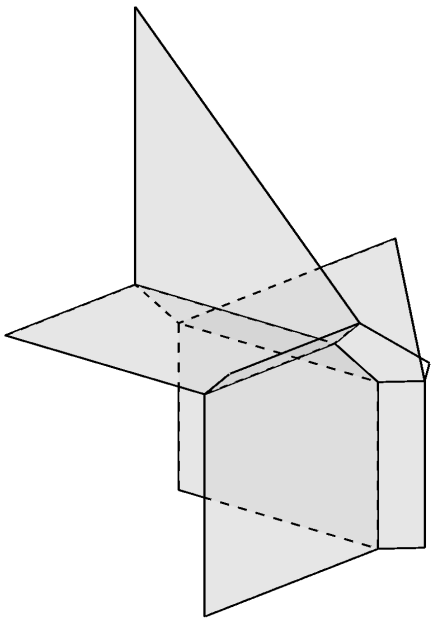

Figure 2.4 – The tropical modificiation of $\mathbb{R}^2$ along "$\frac{P}{Q}$", where "$P = x + y + 0$" and "$Q = y + (-1)$".

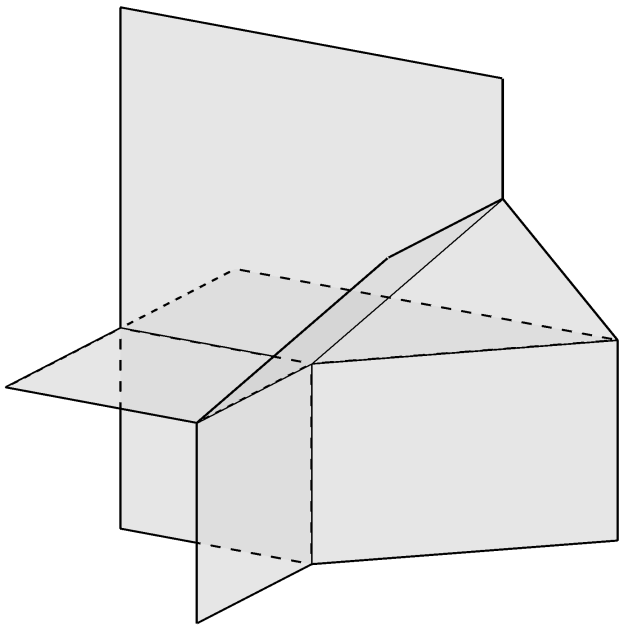

Figure 2.5 – The tropical modificiation of $\mathbb{R}^2$ along "$\frac{P}{Q_1}$", where "$P = x + y + 0$" and "$Q_1 = y + 0$".

Chapter 3

A tropical construction of reducible curves

3.1 Introduction

In this chapter, we give a tropical construction of a family of real reducible curves $\mathcal{D}_n \cup \mathcal{C}_n$ in Σ_n, the nth Hirzebruch surface (see Example 2.1.7). Recall that the families $\mathcal{C}_n$ and $\mathcal{D}_n$ where introduced in Section 1.2.1. The curve $\mathcal{D}_n$ has Newton polytope

$$\Delta_n = Conv\left((0,0),(n,0),(0,1)\right),$$

the curve $\mathcal{C}_n$ has Newton polytope

$$\Theta_n = Conv\left((0,0),(n,0),(0,2),(n,1)\right),$$

and the chart of $\mathcal{D}_n \cup \mathcal{C}_n$ is homeomorphic to the one depicted in Figure 3.1.

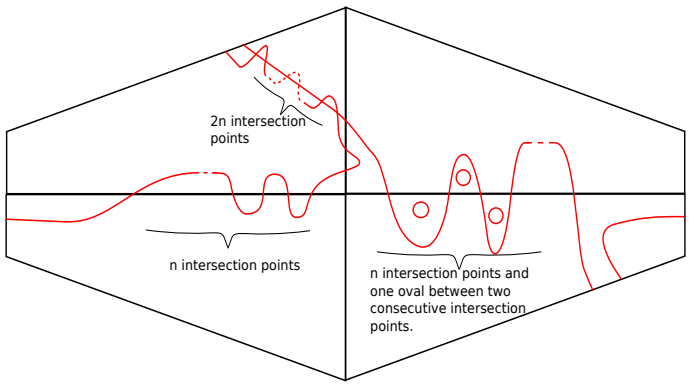

Figure 3.1 – The chart of $\mathcal{D}_n \cup \mathcal{C}_n$

This family of real reducible curves was constructed by E. Brugallé in [Bru06] in order to produce real algebraic curves in $\mathbb{CP}^2$ with asymptotically maximal numbers of even ovals. Denote by p the number of even ovals of a real algebraic curve of degree $2k$ in $\mathbb{CP}^2$. It follows from Petrovsky inequalities and Harnack Theorem that

$$p \leq \frac{7}{4}k^2 - \frac{9}{4}k + \frac{3}{2}.$$

In 1906, V. Ragsdale conjectured that

$$p \leq \frac{3}{2}k(k-1) + 1.$$

In 1993, using Viro's combinatorial patchworking, I. Itenberg (see [Ite95]) disproved Ragsdale's conjecture and constructed a family of real algebraic curves in $\mathbb{CP}^2$ of degree $2k$ with $\frac{13}{8}k^2 + O(k)$ even ovals. This lower bound was successively improved by B. Haas (see [Haa95]), by Itenberg (see [Ite01]) and finally by Brugallé in [Bru06]. Brugallé's construction of a family of real reducible curves $\mathcal{D}_n \cup \mathcal{C}_n$ as above used so-called *real rational graphs theoretical method*, based on Riemann existence theorem (see [Bru06] and [Ore03]). In particular, this method is not constructive. In this chapter, we give a constructive method to get such a family using tropical modifications and combinatorial patchworking for complete intersections (see Theorem 2.3.22 and [Stu94]).

3.2 Strategy of the construction

Let $n \geq 1$. We construct the curve $\mathcal{D}_n$ (resp., $\mathcal{C}_n$) in a 1-parameter family of curves $\mathcal{D}_{n,t}$ (resp., $\mathcal{C}_{n,t}$). To construct such families of curves, we construct a tropical curve D_n with Newton polytope Δ_n (see Figure 3.2 for the case $n = 3$) and a tropical curve C_n with Newton polytope Θ_n (see Figure 3.3 for the case $n = 3$). The family of curves $\mathcal{D}_{n,t}$ (resp. $\mathcal{C}_{n,t}$) then appears as an approximating family of the tropical curve D_n (resp., C_n). It turns out that the tropical curves C_n and D_n do not intersect transversely (see Figure 3.4), so we can not use directly combinatorial patchworking to determine the mutual position of the curves $\mathcal{D}_{n,t}$ and $\mathcal{C}_{n,t}$. We consider then the tropical modification X_n of $\mathbb{R}^2$ along P_n, where P_n is a tropical polynomial defining D_n. In this new model, the curve D_n is the boundary in the vertical direction of the compactification of X_n in $\mathbb{T}^n$, and if $\tilde{C}_n$ is a lifting of C_n in X_n (see Definition 3.3.3), then the compactification of $\tilde{C}_n$ in $\mathbb{T}^n$ intersects D_n transversely. Then, we show that the curve $\tilde{C}_n$ is the transverse intersection of X_n with Y_n, a tropical modification of $\mathbb{R}^2$ along a tropical rational function (see Definition 2.3.5). We define real phases φ_{D_n} on D_n and real phases φ_{C_n} on C_n (see Figure 3.10 and Figure 3.11 for the case $n = 3$) and we construct real phases φ_{X_n} on X_n and real phases φ_{Y_n} on Y_n satisfying compatibility conditions with φ_{D_n} and φ_{C_n} (see Lemma 3.4.1). It follows from Theorem 2.3.21 that there exists a family of real polynomials $P_{n,t}$ with Newton polytopes Δ_n such that if we put

$$\mathcal{D}_{n,t} = \{P_{n,t}(x, y) = 0\},$$

and

$$\mathcal{X}_{n,t} = \{z + P_{n,t}(x, y) = 0\},$$

one has

$$\lim_{t\to+\infty} \mathrm{Log}_t \left(\mathbb{R}\mathcal{D}_{n,t} \cap s_\varepsilon \left((\mathbb{R}_+^*)^2\right)\right) \cap V = (\mathbb{R}D_n^\varepsilon)^{\log} \cap V,$$

and

$$\lim_{t\to+\infty} \mathrm{Log}_t \left(\mathbb{R}\mathcal{X}_{n,t} \cap s_\eta \left((\mathbb{R}_+^*)^3\right)\right) \cap W = (\mathbb{R}X_n^\eta)^{\log} \cap W,$$

for any $\varepsilon \in (\mathbb{Z}/2\mathbb{Z})^2$, any $\eta \in (\mathbb{Z}/2\mathbb{Z})^3$, any compact $V \subset \mathbb{R}^2$ and any compact $W \subset \mathbb{R}^3$. It follows from Theorem 2.3.22 that there exists a family of surfaces $\mathcal{Y}_{n,t}$ such that for any $\varepsilon \in (\mathbb{Z}/2\mathbb{Z})^3$ and any compact $V \subset \mathbb{R}^3$, one has

$$\lim_{t\to+\infty} \mathrm{Log}_t \left(\mathbb{R}\mathcal{X}_{n,t} \cap \mathbb{R}\mathcal{Y}_{n,t} \cap s_\varepsilon \left((\mathbb{R}_+^*)^3\right)\right) \cap V = (\mathbb{R}X_n^\varepsilon)^{\log} \cap (\mathbb{R}Y_n^\varepsilon)^{\log} \cap V.$$

Consider the projection $\pi^{\mathbb{C}} : (\mathbb{C}^*)^3 \to (\mathbb{C}^*)^2$ forgetting the last coordinate. For every t, put

$$\mathcal{C}_{n,t} = \pi^{\mathbb{C}}(\mathcal{X}_{n,t} \cap \mathcal{Y}_{n,t}).$$

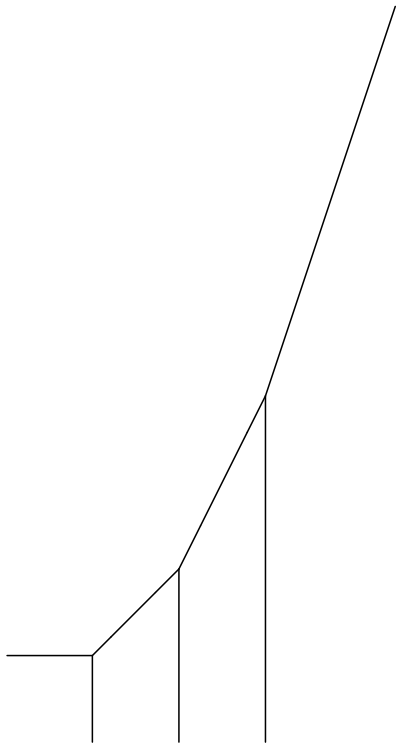

Figure 3.2 – Tropical curve D_3.

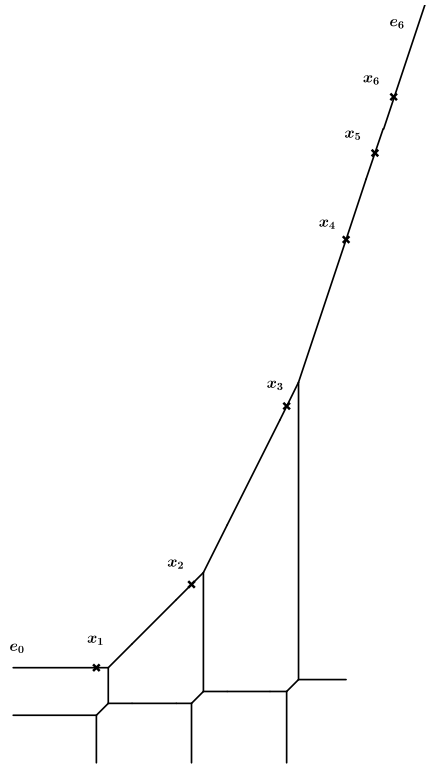

Figure 3.3 – Tropical curve C_3.

Then, the Newton polytope of $\mathcal{C}_{n,t}$ is Θ_n and we show that for t large enough, the chart of $\mathcal{D}_{n,t} \cup \mathcal{C}_{n,t}$ is homeomorphic to the chart depicted in Figure 3.1. Thus, we put

$$\mathcal{D}_n = \mathcal{D}_{n,t},$$

and

$$\mathcal{C}_n = \mathcal{C}_{n,t}$$

for t large enough.

3.3 Construction of X_n, $\tilde{C}_n$ and Y_n

Consider the subdivision of Δ_n given by the triangles

$$\Delta_n^k = Conv\left((k,0),(0,1),(k+1,0)\right),$$

for $0 \leq k \leq n-1$. Consider the subdivision of Θ_n given by the triangles

- $K_n^k = Conv\left((k,0),(k,1),(k+1,0)\right)$,
- $L_n^k = Conv\left((k,1),(k+1,0),(k+1,1)\right)$ and
- $M_n^k = Conv\left((k,1),(k,2),(k+1,1)\right)$,

for $0 \leq k \leq n-1$. Consider a tropical curve D_n dual to the subdivision $\left(\Delta_n^k\right)_{0\leq k\leq n-1}$ of Δ_n (see Figure 3.2 for the case $n=3$), a tropical curve C_n dual to the subdivision $\left(K_n^k, L_n^k, M_n^k\right)_{0\leq k\leq n-1}$ of Θ_n (see Figure 3.3 for the case $n=3$), and $2n$ marked points $x_1, \cdots, x_{2n}$ on C_n, such that D_n, C_n and $x_1, \cdots, x_{2n}$ satisfy the following conditions.

1. For any $0 \leq k \leq n-1$, the coordinates of the vertex of D_n dual to Δ_n^k are equal to the coordinates of the vertex of C_n dual to M_n^k.

2. For any $1 \leq k \leq n$ the first coordinate of x_k is equal to the first coordinate of the vertex dual to K_n^{k-1}.

3. For any $n+1 \leq k \leq 2n$, the marked point x_k is on the edge of C_n dual to the edge $[(0,2),(n,1)]$ of Θ_n.

For each marked point x_i, $1 \leq i \leq 2n$, refine the edge of C_n containing x_i by considering the marked point x_i as a vertex of C_n. In Figure 3.4, we draw the tropical curves D_3 and C_3 on the same picture. Denote by P_n a tropical polynomial defining the tropical curve

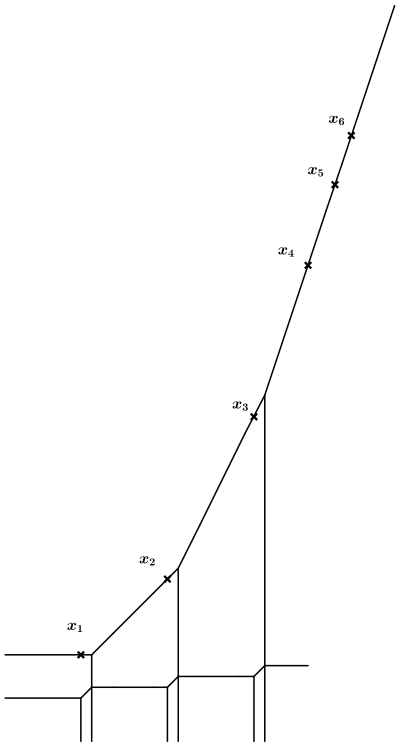

Figure 3.4 – The curves D_3 and C_3.

D_n and put $X_n = \mathbb{R}^2_{P_n}$.

Definition 3.3.1. *Let $C \subset \mathbb{R}^2$ be a tropical curve with k vertices of valence 2 denoted by $x_1, \cdots, x_k$ (called the marked points of C). We say that a tropical curve $\tilde{C} \subset \mathbb{R}^3$ is a lift of $(C, x_1, \cdots, x_k)$ if the following conditions are satisfied.*

- *$\pi^{\mathbb{R}}\left(\tilde{C}\right) = C$, where $\pi^{\mathbb{R}} : \mathbb{R}^3 \to \mathbb{R}^2$ denotes the vertical projection on the first two coordinates.*

- *Any infinite vertical edge of $\tilde{C}$ is of the form $](x, -\infty), (x, r)]$, with $x \in \mathbb{R}^2$ and $r \in \mathbb{R}$.*

- *An edge e of $\tilde{C}$ is an infinite vertical edge if and only if $\pi^{\mathbb{R}}(e) \subset \{x_1, \cdots, x_k\}$.*

- *For any point x in the interior of an edge e of C such that $(\pi^{\mathbb{R}})^{-1}(x) \cap \tilde{C}$ is finite,*

one has

$$w(e) = \sum_{i=1}^{l} w(f_i)\,[\Lambda_e : \Lambda_{f_i}]\,,$$

where $f_1, \cdots, f_l$ are the edges of $\tilde{C}$ containing the preimages of x, the weight of e (resp., f_i) is denoted by $w(e)$ (resp., $w(f_i)$) and Λ_e (resp., Λ_{f_i}) denotes the sublattice of $\mathbb{Z}^3$ generated by a primitive vector in the direction of e (resp., f_i) and by the vector $(0,0,1)$.

Remark 3.3.2. *Let C be a nonsingular tropical curve in $\mathbb{R}^2$ with k marked points $x_1, \cdots, x_k$ such that there exists a lifting $\tilde{C}$ of $(C, x_1, \cdots, x_k)$ in $\mathbb{R}^3$. Then, it follows from Definition 3.3.1 that for any edge e of C, there exists a unique edge f of $\tilde{C}$ such that $\pi^{\mathbb{R}}(f) = e$. Moreover, one has $w(f) = 1$. It follows from the balancing condition that at any trivalent vertex v of C, the directions of the lifts of any two edges adjacents to v determine the direction of the lift of the third edge adjacent to v. At any marked point x_i, the direction of the lift of an edge adjacent to x_i and the weight of the infinite vertical edge of $\tilde{C}$ associated to x_i determine the direction of the lift of the other edge adjacent to x_i.*

Definition 3.3.3. *Let h be a tropical rational function on $\mathbb{R}^2$ and let $\mathbb{R}^2_h$ be the tropical modification of $\mathbb{R}^2$ along h. Let $C \subset \mathbb{R}^2$ be a tropical curve with k marked points $x_1, \cdots, x_k$. We say that the marked tropical curve $(C, x_1, \cdots, x_k)$ can be lifted to $\mathbb{R}^2_h$ if there exists a lifting $\tilde{C}$ of $(C, x_1, \cdots, x_k)$ in $\mathbb{R}^3$ such that $\tilde{C} \subset \mathbb{R}^2_h$.*

Remark 3.3.4. *Assume that a trivalent marked tropical curve $(C, x_1, \cdots, x_k)$ can be lifted to some tropical modification $\mathbb{R}^2_h$, where $h =$ "$\dfrac{f}{g}$" is some tropical rational function. It follows from the definition of a tropical modification that outside of $V(f) \cup V(g)$, the lift of an edge of C to $\mathbb{R}^2_h$ is uniquely determined.*

Lemma 3.3.5. *There exists a unique lifting of the marked tropical curve $(C_n, x_1, \cdots, x_{2n})$ to X_n.*

Proof. It follows from Remark 3.3.4 that for all edges e of C_n not belonging to D_n, the lift of e in X_n is uniquely determined. The lift of a marked point x_i is an edge s_i of the form $](x_i, -\infty), (x_i, r_i)]$, where $r_i \in \mathbb{R}$. Denote by e_0 the edge of C_n dual to the edge $[(0,1),(0,2)]$ and by e_{2n} the infinite edge of C_n dual to the edge $[(0,2),(n,1)]$ adjacent to x_{2n} (see Figure 3.3 for the case $n = 3$). One can see from Remark 3.3.2 that if the direction of $\tilde{e}_0$ is $(1,0,s)$ then the direction of the lift of e_{2n} is $(1,0,s+\sum w(s_i))$. Since the edges e_0 and e_{2n} are unbounded, one has $s \geq 0$ and $s + \sum w(s_i) \leq n$. Thus, the direction of $\tilde{e}_0$ is $(1,0,0)$ and $w(s_i) = 1$, for $1 \leq i \leq n$. One can see following Remark 3.3.2 that in this case the direction of a lift of any edge of C_n is uniquely determined. The only potential obstructions on the lifts of the edges of C_n to close up come from the cycles of C_n. Denote by Z_k the cycle bounding the face dual to the vertex $(k-1,1)$ of Θ_n, for $2 \leq k \leq n$ (see Figure 3.5). Denote by $e_1^k, \cdots, e_6^k$ the edges of Z_k as indicated in Figure 3.5. Orient the edges e_i^k with the orientation coming from the counterclockwise orientation of the cycle Z_k. Denote by $\left[e_i^k\right]$ the lift of the edge e_i^k, oriented with the orientation coming from the one of e_i^k. Denote by $\overrightarrow{e_i^k}$ the primitive vector in the direction of $\left[e_i^k\right]$, and denote by l_i^k the integer length of e_i^k. The lifts of the edges of Z_k close up if and only if the following equation is satisfied:

$$\sum_{i=1}^{i=6} l_i^k \overrightarrow{e_i^k} = 0.$$

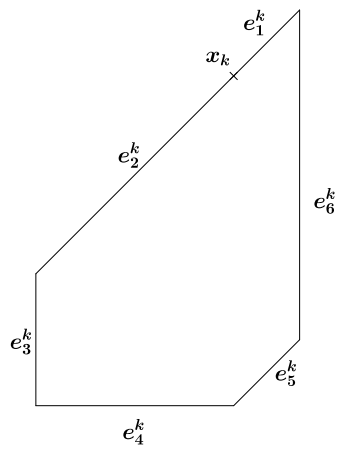

Figure 3.5 – The cycle Z_k.

This equation is equivalent to

$$l_1^k \begin{pmatrix} -1 \\ -k \\ -1 \end{pmatrix} + l_2^k \begin{pmatrix} -1 \\ -k \\ 0 \end{pmatrix} + l_3^k \begin{pmatrix} 0 \\ -1 \\ 1 \end{pmatrix} + l_4^k \begin{pmatrix} 1 \\ 0 \\ k \end{pmatrix} + l_5^k \begin{pmatrix} 1 \\ 1 \\ k \end{pmatrix} + l_6^k \begin{pmatrix} 0 \\ 1 \\ -1 \end{pmatrix} = 0.$$

This equation is equivalent on the cycle Z_k to

$$\begin{cases} l_2^k = l_4^k, \\ l_1^k = l_5^k. \end{cases}$$

This is equivalent to say that the first coordinate of the marked point x_k is equal to the first coordinate of the vertex dual to K_n^{k-1}, for $2 \leq k \leq n$. □

We construct a tropical rational function h_n such that the curve $\tilde{C}_n$ is the transverse intersection of X_n and $\mathbb{R}^2_{h_n}$. Consider the subdivision of Θ_n given by the triangles

- $G_n^k = Conv\left((k,0),(0,1),(k+1,0)\right)$,
- $H_n^k = Conv\left((k,1),(k+1,1),(n,0)\right)$ and
- $I_n^k = Conv\left((k,1),(0,2),(k+1,1)\right)$,

for $0 \leq k \leq n-1$. Consider a tropical curve F_n dual to the subdivision $\left(G_n^k, H_n^k, I_n^k\right)_{0\leq k\leq n-1}$ and a horizontal line E such that the following conditions are satisfied (see Figure 3.6 and Figure 3.7 for the case $n = 3$).

1. The horizontal line E is below any vertex of C_n.
2. The marked point x_k is on the edge dual to the edge $[(k-1,0),(k,0)]$, for $1 \leq k \leq n$.
3. The edge of F_n dual to the edge $[(1,1),(n,0)]$ intersects transversely the edge of C_n dual to the edge $[(0,2),(n,1)]$ at the point x_{n+1}.

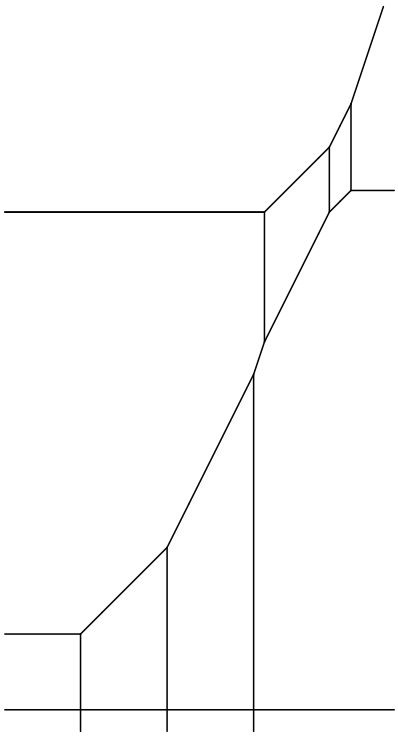

Figure 3.6 – The curve F_3 and the curve E.

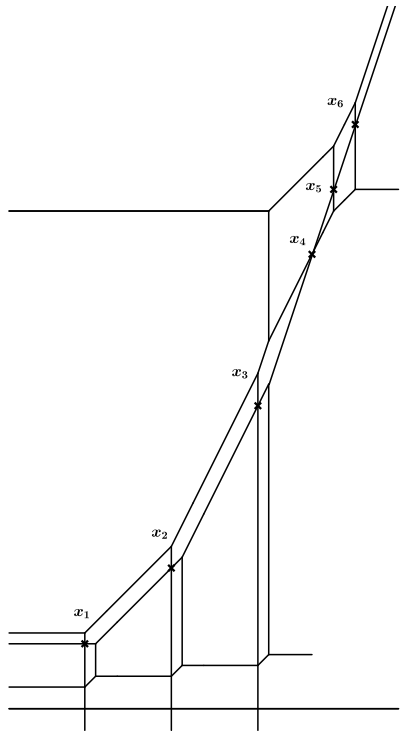

Figure 3.7 – The relative position of the curves F_3, C_3 and E.

4. The edge of F_n dual to the edge $[(k,1),(k+1,1)]$ intersects transversely the edge of C_n dual to the edge $[(0,2),(n,1)]$ at the point x_{n+k+1}, for $1 \leq k \leq n-1$.

Denote by f_n a tropical polynomial satisfying $V(f_n) = F_n$ and by g a tropical polynomial satisfying $V(g) = E$. Put $h_n^0 = \text{“}\frac{f_n}{g}\text{”}$.

Lemma 3.3.6. *There exists a unique lifting of the curve $(C_n, x_1, \cdots, x_{2n})$ to $\mathbb{R}^2_{h_n^0}$. Moreover, there exists $\lambda_0 \in \mathbb{R}$ such that $\tilde{C}_n$ is the lifting of $(C_n, x_1, \cdots, x_{2n})$ to $\mathbb{R}^2_{\text{“}\lambda_0 h_n^0\text{”}}$.*

Proof. Let e be an edge of C_n not contained in F_n. Then the lift of e to $\mathbb{R}^2_{h_n^0}$ is uniquely determined. Consider the subdivision of $\mathbb{R}^2$ induced by the tropical curve $F_n \cup E$. Denote by F^k the face of this subdivision dual to the point $(k,1)$, and by G^k the face dual to the point $(k,2)$, for $0 \leq k \leq n$. The direction of the face of $\mathbb{R}^2_{h_n^0}$ projecting to F^k is generated by the vectors $(0,1,-1)$ and $(1,k,0)$, and the direction of the face of $\mathbb{R}^2_{h_n^0}$ projecting to G^k is generated by the vectors $(0,1,0)$ and $(1,k,k)$. It follows from these computations that the lift to $\mathbb{R}^2_{h_n^0}$ of an edge e of C_n not contained in F_n has same direction as the edge of $\tilde{C}_n$ projecting to e. From Remark 3.3.2, we deduce in this case that $(C_n, x_1, \cdots, x_{2n})$ has a unique lifting to $\mathbb{R}^2_{h_n^0}$ and that the result is a vertical translation of $\tilde{C}_n$. Then there exists $\lambda_0 \in \mathbb{R}$ such that the lifting of $(C_n, x_1, \cdots, x_{2n})$ to $\mathbb{R}^2_{\text{“}\lambda_0 h\text{”}}$ is $\tilde{C}_n$. □

Put $h_n = \text{“}\lambda_0 h_n^0\text{”}$ and $Y_n = \mathbb{R}^2_{\text{“}\lambda_0 h\text{”}}$.

Lemma 3.3.7. *The surfaces X_n and Y_n intersect transversely and $\tilde{C}_n = X_n \cap Y_n$.*

Proof. It follows from Lemma 3.3.6 that $\tilde{C}_n \subset X_n \cap Y_n$. By construction, any edge of $\tilde{C}_n$ is the transverse intersection of a face of X_n with a face of Y_n. So $\tilde{C}_n \subset X_n \cdot Y_n$, where

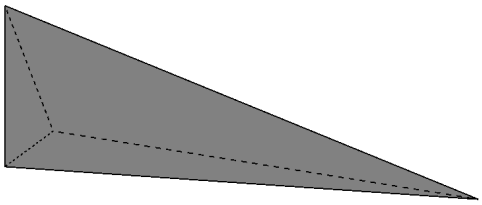

Figure 3.8 – The Newton polytope of X_n.

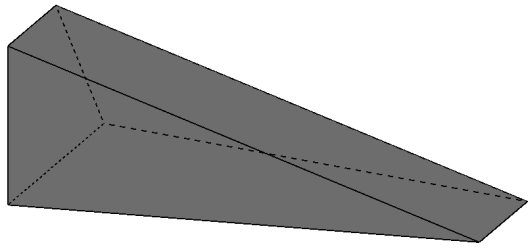

Figure 3.9 – The Newton polytope of Y_n.

$X_n \cdot Y_n$ denotes the stable intersection of X_n and Y_n (see Section 2.3.1). Let us compute the number (counted with multiplicity) of infinite edges of $X_n \cdot Y_n$ in a given direction. Denote by $\Delta(X_n)$ the Newton polytope of X_n, and denote by $\Delta(Y_n)$ the Newton polytope of Y_n. One has

$$\Delta(X_n) = Conv\left((0,0,0),(n,0,0),(0,1,0),(0,0,1)\right),$$

and

$$\Delta(Y_n) = Conv\left((0,0,0),(n,0,0),(n,1,0),(0,2,0),(0,0,1),(1,0,1)\right),$$

see Figure 3.8 and Figure 3.9. By considering faces of the Minkowsky sum

$$\Delta(X_n) + \Delta(Y_n) = \{a + b \mid a \in \Delta(X_n) \text{ and } b \in \Delta(Y_n)\},$$

one can see that $X_n \cdot Y_n$ has two edges (counted with multiplicity) of direction $(-1,0,0)$, n edges (counted with multiplicity) of direction $(0,-1,0)$, $2n$ edges (counted with multiplicity) of direction $(0,0,-1)$, one edge of direction $(1,0,n)$ and one edge of direction $(1,n,n)$. Since the curve $\tilde{C}_n$ has also two edges of direction $(-1,0,0)$, n edges of direction $(0,-1,0)$, $2n$ edges of direction $(0,0,-1)$, one edge of direction $(1,0,n)$ and one edge of direction $(1,n,n)$, we conclude that $\tilde{C}_n = X_n \cdot Y_n = X_n \cap Y_n$. □

3.4 Real phases on X_n and Y_n

Consider the Harnack phase φ_{D_n} on D_n and the Harnack phase φ_{C_n} on C_n (see Definition 2.3.20). We depicted the real part of D_3 on Figure 3.10 and the real part of C_3 on Figure 3.11. Notice that for the real phase φ_{C_n} on C_n, every edge of C_n containing a marked point is equipped with the sign $(-,+)$. Consider the $2n$ marked points $r_1, \cdots r_{2n}$ on $\mathbb{R}C_n$, where r_i is the symmetric copy of x_i in the quadrant $\mathbb{R}^*_- \times \mathbb{R}^*_+$ (see Figure 3.11 for the case $n = 3$).

Lemma 3.4.1. *There exist a real phase φ_{X_n} on X_n and a real phase φ_{Y_n} on Y_n such that the following conditions are satisfied:*

1. *$\mathbb{R}D_n$ is the projection of the union of all vertical faces of $\mathbb{R}X_n$.*

2. *$\pi^{\mathbb{R}}\left(\mathbb{R}X_n \cap \mathbb{R}Y_n\right) = \mathbb{R}C_n$.*

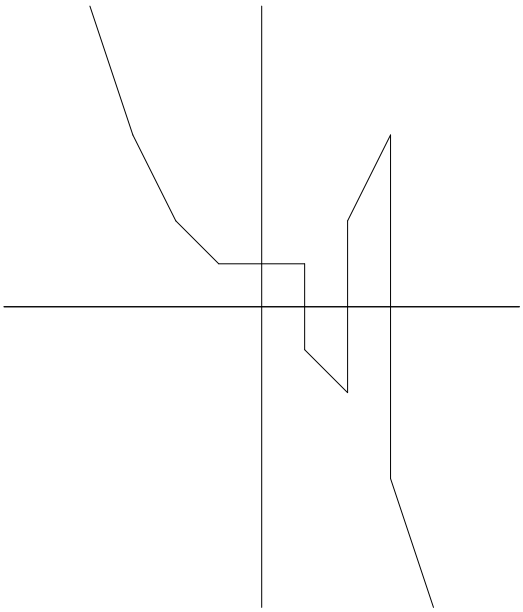

Figure 3.10 – The real part $\mathbb{R}D_3$.

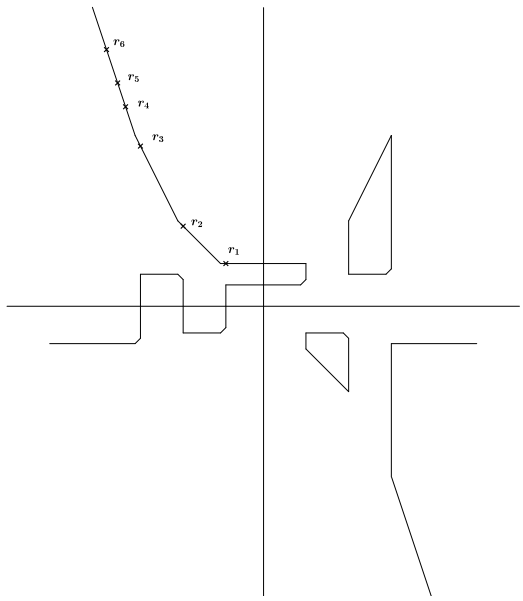

Figure 3.11 – The real part $\mathbb{R}C_3$.

3. *An edge e of $\mathbb{R}X_n \cap \mathbb{R}Y_n$ is unbounded in direction $(0,0,-1)$ if and only if $\pi^{\mathbb{R}}(e) \subset \{r_1, \cdots, r_{2n}\}$.*

Proof. Denote by δ_{D_n} the Harnack distribution of signs at the vertices of the subdivision of Δ_n dual to D_n. By definition, φ_{D_n} is compatible with δ_{D_n}. Complete the distribution of signs δ_{D_n} to a distribution of signs δ_{X_n} at the vertices of the dual subdivision of X_n by choosing an arbitrary sign for the vertex $(0,0,1)$. Define φ_{X_n} to be the real phase on X_n compatible with δ_{X_n}. By construction, φ_{X_n} satisfies Condition 1 of Lemma 3.4.1. Define a real phase on Y_n as follows. Denote by $\mathcal{G}$ the set of all faces of Y_n containing an edge of $\tilde{C}_n$.

We first define a real phase $\varphi_{Y_n,F}$ on any face $F \in \mathcal{G}$. Consider, as in the proof of Lemma 3.3.6, the subdivision of $\mathbb{R}^2$ induced by the tropical curve $F_n \cup E$. Denote by F^k the face of this subdivision dual to the point $(k,1)$, and by G^k the face dual to the point $(k,2)$, for $0 \leq k \leq n$. Denote by $\tilde{F}^k$ the face of Y_n such that $\pi^{\mathbb{R}}(\tilde{F}^k) = F^k$ and by $\tilde{G}^k$ the face of Y_n such that $\pi^{\mathbb{R}}(\tilde{G}^k) = G^k$, for $0 \leq k \leq n$. Denote by f_k the edge of F_n containing x_k and by $\tilde{f}_k$ the vertical face of Y_n projecting to f_k, for $1 \leq k \leq 2n$. One can see that all the edges of $\tilde{C}_n$ are contained in the union of all faces $\tilde{F}^k$, $\tilde{G}^k$ and $\tilde{f}_k$. For any $0 \leq k \leq n$, one can see that the face $\tilde{F}^k$ contains an edge e of $\tilde{C}_n$ such that e is contained in a non-vertical face F_e of X_n. Denote by $(\varepsilon_1, \varepsilon_2)$ a component of the real phase φ_{C_n} on $\pi^{\mathbb{R}}(e)$. Since F_e is non-vertical, there exists a unique sign ε_3 such that $(\varepsilon_1, \varepsilon_2, \varepsilon_3)$ is a component of the real phase φ_{X_n} on F_e. Define the real phase φ_{Y_n} on $\tilde{F}^k$ to contain $(\varepsilon_1, \varepsilon_2, \varepsilon_3)$ as a component. Condition 3 of Lemma 3.4.1 determines the real phase φ_{Y_n} on $\tilde{f}_k$, for any $1 \leq k \leq 2n$. Since the three faces $\tilde{F}^n$, $\tilde{G}^1$ and $\tilde{f}_{n+1}$ are adjacent, it follows from the definition of a real phase that the phase on $\tilde{G}^1$ is determined from the phase on $\tilde{F}^n$ and the phase on $\tilde{f}_{n+1}$. Since the three faces $\tilde{G}^{k+1}$, $\tilde{G}^k$ and $\tilde{f}_{n+k+1}$ are adjacent, for any $1 \leq k \leq n-1$, it follows from the definition of a real phase that the phase on $\tilde{G}^{k+1}$ is determined from the phase on $\tilde{G}^k$ and the phase on $\tilde{f}_{n+k+1}$. By induction, it determines the real phase φ_{Y_n} on $\tilde{G}^k$, for $1 \leq k \leq n$.

We now extend the definition of φ_{Y_n} to all faces of Y_n. Consider the set of edges $\mathcal{E}$ of the

dual subdivision of Y_n such that $e \in \mathcal{E}$ if and only if e is dual to an element in $\mathcal{G}$. Consider $\mathcal{V}$ the set of vertices of edges in $\mathcal{E}$. As in Lemma 2.3.19, one can consider a distribution of signs on $\mathcal{V}$ compatible with the real phase on $\mathcal{G}$. Extend arbitrarily this distribution to all vertices of the dual subdivision of Y_n and consider the real phase φ_{Y_n} on Y_n compatible with the extended distribution of signs. By construction, the real phases φ_{X_n} and φ_{Y_n} satisfy the Conditions 1, 2 and 3 of Lemma 3.4.1. □

Put

$$\mathbb{R}\tilde{C}_n = \mathbb{R}X_n \cap \mathbb{R}Y_n.$$

Consider, as explained in Section 3.2, a family of real algebraic curves $\mathcal{D}_{n,t}$ approximating (D_n, φ_{D_n}), a family of real algebraic surfaces $\mathcal{X}_{n,t}$ approximating (X_n, φ_{X_n}) and a family of real algebraic surfaces $\mathcal{Y}_{n,t}$ approximating (Y_n, φ_{Y_n}). Put $\tilde{\mathcal{C}}_{n,t} = \mathcal{X}_{n,t} \cap \mathcal{Y}_{n,t}$.

For every t, put $\mathcal{C}_{n,t} = \pi^{\mathbb{C}}\left(\tilde{\mathcal{C}}_{n,t}\right)$. Consider $\overline{\mathbb{R}X_n}$ the partial compactification of $\mathbb{R}X_n$ in $(\mathbb{R}^*)^2 \times \mathbb{R}$ and $\overline{\mathbb{R}\mathcal{X}_{n,t}}$ the partial compactification of $\mathbb{R}\mathcal{X}_{n,t}$ in $(\mathbb{R}^*)^2 \times \mathbb{R}$, for any t. One has $\overline{\mathbb{R}X_n} \cap \left((\mathbb{R}^*)^2 \times \{0\}\right) = \mathbb{R}D_n$ and $\overline{\mathbb{R}\mathcal{X}_{n,t}} \cap \left((\mathbb{R}^*)^2 \times \{0\}\right) = \mathbb{R}\mathcal{D}_{n,t}$. Then, it follows from Theorem 2.3.22 that for t large enough, one has the following homeomorphism of pairs:

$$\left(\overline{\mathbb{R}\mathcal{X}_{n,t}}, \mathbb{R}\mathcal{D}_{n,t} \cup \mathbb{R}\tilde{\mathcal{C}}_{n,t}\right) \simeq \left(\overline{\mathbb{R}X_n}, \mathbb{R}D_n \cup \mathbb{R}\tilde{C}_n\right). \tag{3.1}$$

Moreover, the map $\pi^{\mathbb{R}}$ gives by restriction a bijection from $\overline{\mathbb{R}\mathcal{X}_{n,t}}$ to $(\mathbb{R}^*)^2$ fixing $\mathbb{R}\mathcal{D}_{n,t}$ and sending $\mathbb{R}\tilde{\mathcal{C}}_{n,t}$ to $\mathbb{R}\mathcal{C}_{n,t}$. The map $\pi^{\mathbb{R}}$ and the homeomorphism (3.1) give rise to the following homeomorphism of pairs, for t large enough:

$$\left((\mathbb{R}^*)^2, \mathbb{R}\mathcal{D}_{n,t} \cup \mathbb{R}\mathcal{C}_{n,t}\right) \simeq \left(\overline{\mathbb{R}X_n}, \mathbb{R}D_n \cup \mathbb{R}\tilde{C}_n\right). \tag{3.2}$$

It remains to describe the pair $\left(\overline{\mathbb{R}X_n}, \mathbb{R}D_n \cup \mathbb{R}\tilde{C}_n\right)$. One has $\pi^{\mathbb{R}}(\overline{\mathbb{R}X_n}) = (\mathbb{R}^*)^2$ and for any $x \in \mathbb{R}D_n$, $(\pi^{\mathbb{R}})^{-1}(x)$ is an interval of the form $\{x\} \times [-h, h]$, see Figure 3.12 for a local picture.

Remark 3.4.2. *The set $(\pi^{\mathbb{R}})^{-1}(\mathbb{R}D_n)$ can be seen as a tubular neighborhood of $\mathbb{R}D_n$ in $\mathbb{R}X_n$.*

Outside of $(\pi^{\mathbb{R}})^{-1}(\mathbb{R}D_n)$, the map $\pi|_{\overline{\mathbb{R}X_n}}$ is bijective. Let V be a small tubular neighborhood of $\mathbb{R}D_n$ in $(\mathbb{R}^*)^2$. Perturb slightly the pair $(\overline{\mathbb{R}X_n}, \mathbb{R}\tilde{C}_n)$ inside $(\pi^{\mathbb{R}})^{-1}(V)$ to produce a pair (S_n, T_n), such that

- $(\overline{\mathbb{R}X_n}, \mathbb{R}\tilde{C}_n) \simeq (S_n, T_n)$,
- $\mathbb{R}D_n \subset S_n$,
- $\pi^{\mathbb{R}}$ defines an homeomorphism from S_n to $(\mathbb{R}^*)^2$,

see Figure 3.12 and Figure 3.13 for a local picture. One obtains the following homeomorphism of pairs, for t large enough:

$$\left((\mathbb{R}^*)^2, \mathbb{R}\mathcal{D}_{n,t} \cup \mathbb{R}\mathcal{C}_{n,t}\right) \simeq \left((\mathbb{R}^*)^2, \mathbb{R}D_n \cup \pi^{\mathbb{R}}(T_n)\right). \tag{3.3}$$

By construction, the curve $\pi^{\mathbb{R}}(T_n)$ is a small perturbation of $\mathbb{R}C_n$, intersecting the curve $\mathbb{R}D_n$ transversely and only at the marked points $r_1, \cdots, r_{2n}$, see Figure 3.14 and Figure 3.15 for the case $n = 3$. Then, for t large enough, the chart of the reducible curve $\mathcal{D}_{n,t} \cup \mathcal{C}_{n,t}$ is homeomorphic to the chart depicted in Figure 3.1.

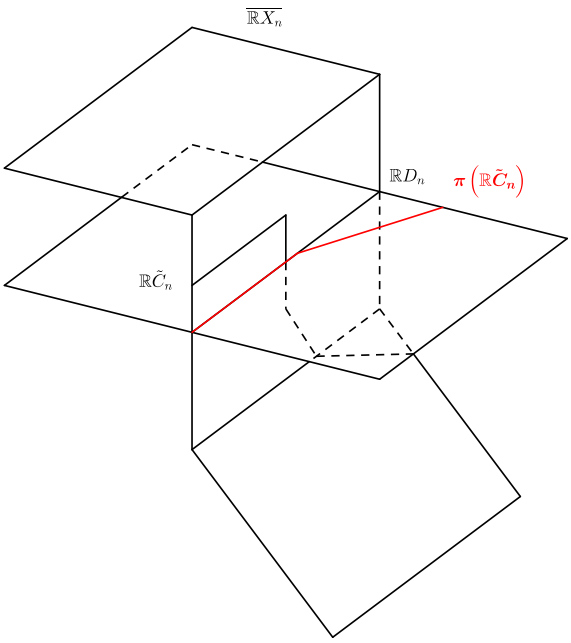

Figure 3.12 – The curve $\mathbb{R}D_n \cup \mathbb{R}\tilde{C}_n$ in the surface $\overline{\mathbb{R}X_n}$ and the projection $\pi^{\mathbb{R}}(\mathbb{R}\tilde{C}_n)$.

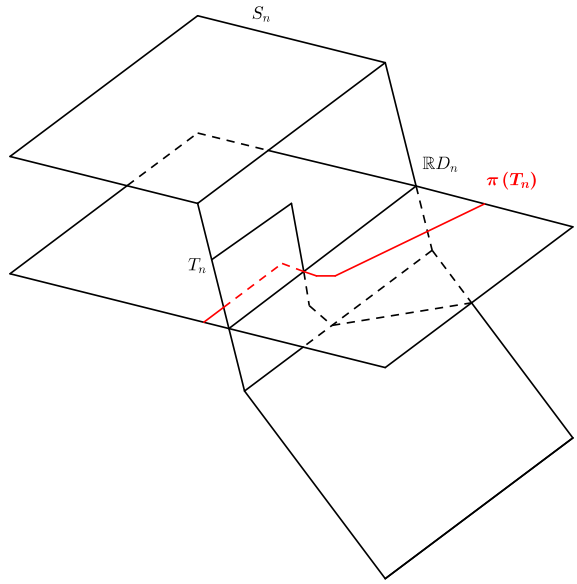

Figure 3.13 – The curve $\mathbb{R}D_n \cup T_n$ in the surface S_n and the projection $\pi^{\mathbb{R}}(T_n)$

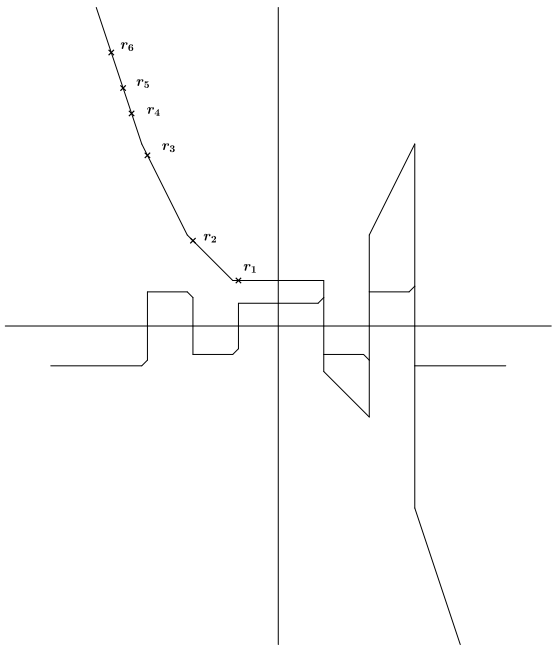

Figure 3.14 – $\mathbb{R}C_3 \cup \mathbb{R}D_3$.

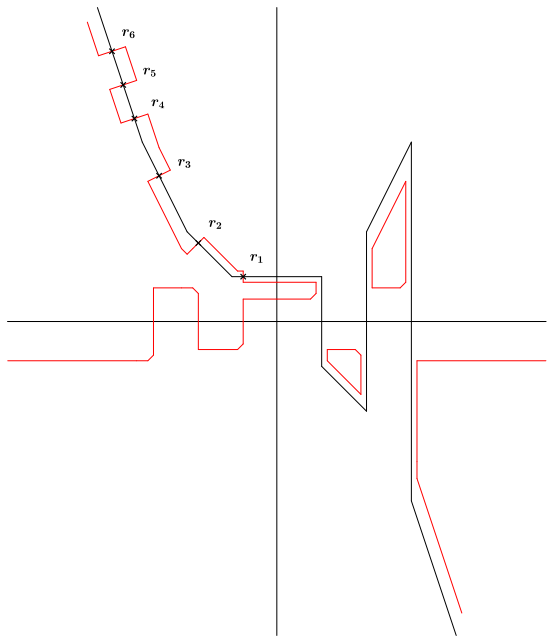

Figure 3.15 – $\pi(T_3) \cup \mathbb{R}D_3$

Chapter 4

A real sextic surface with 45 handles

4.1 Introduction and statement of the main result

If X is a real algebraic surface of degree 6 in $\mathbb{CP}^3$, then one has: $h^{2,0}(X) = 10$, $h^{1,1}(X) = 86$, $\sigma(X) = -64$ and $b_*(X) = 108$. Therefore, using Smith-Thom inequality and one of the two Comessatti inequalities, one obtains

$$b_1(\mathbb{R}X) \leq 96 = h^{1,1}(X) + 10.$$

The existence of a real algebraic surface X of degree 6 in $\mathbb{CP}^3$ such that $b_1(\mathbb{R}X) = 96$ is prohibited using Smith-Thom inequality and Rokhlin congruence. Therefore, if X is a real algebraic surface of degree 6 in $\mathbb{CP}^3$, one has

$$b_1(\mathbb{R}X) \leq 94 = h^{1,1}(X) + 8.$$

F. Bihan constructed in [Bih01] a real algebraic surface X_0 of degree 6 in $\mathbb{CP}^3$ satisfying $b_1(\mathbb{R}X_0) = 88$. Moreover, X_0 is an $(M-2)$-surface and the real part of X_0 is homeomorphic to $6S \amalg S_2 \amalg S_{42}$, where S denotes a two-dimensional sphere and S_α denotes a two-dimensional sphere with α handles. Bihan's construction uses Viro's combinatorial patchworking and an equivariant deformation due to Horikawa (see [Hor93]). In this chapter, we improve this construction.

Theorem 4.1.1. *There exists a real algebraic surface X of degree 6 in $\mathbb{CP}^3$ such that*

$$\mathbb{R}X \simeq 4S \amalg 2S_2 \amalg S_{41}.$$

The surface X is an $(M-2)$-surface satisfying

$$b_1(\mathbb{R}X) = h^{1,1} + 4 = 90.$$

The existence of a real algebraic surface X of degree 6 in $\mathbb{CP}^3$ satisfying $92 \leq b_1(\mathbb{R}X) \leq 94$ is still unknown. The main novelty, compared to [Bih01], is that we deal with the general Viro's method. To do so, we use a curve constructed by E. Brugallé in [Bru06] (see also chapter 3), and we consider a singular surface instead of the classical double cover (see Subsection 4.3.2). This chapter is organized as follows. In Section 4.2, we describe a class of real algebraic surfaces, the so-called surfaces of type $(1c)$,

and an equivariant deformation of a real surface of type $(1c)$ to a real algebraic surface of degree 6 in $\mathbb{CP}^3$. In Section 4.3, we use Viro's combinatorial patchworking to construct a real surface Z of type $(1c)$. Then, using general Viro's method, we slightly modify the construction of Z to obtain a real surface Y of type $(1c)$ satisfying

$$\mathbb{R}Y \simeq 4S \amalg 2S_2 \amalg S_{41}.$$

4.2 An equivariant deformation

Consider the 4-dimensional weighted projective space $\mathbb{CP}^4(2)$ with complex homogeneous coordinates z_0, z_1, z_2, z_3 of weight 1 and z_4 of weight 2.

Definition 4.2.1. (*see [Hor93]*)
An algebraic surface Y in $\mathbb{CP}^4(2)$ is said to be of type $(1c)$ if Y is defined by the following system of equations:

$$\begin{cases} z_4^3 + f_2(z)z_4^2 + f_4(z)z_4 + f_6(z) = 0, \\ z_0z_3 - z_1z_2 = 0, \end{cases}$$

where $f_{2i}(z)$ is a homogeneous polynomial of degree $2i$ in the variables z_0, z_1, z_2, z_3.
We define a real algebraic surface of type $(1c)$ to be a complex algebraic surface of type $(1c)$ invariant under the standard real structure on $\mathbb{CP}^4(2)$.

In his construction, Bihan used an equivariant version of Horikawa's deformation of surfaces of type $(1c)$ in $\mathbb{CP}^4(2)$.

Definition 4.2.2. *A **family of compact complex surfaces** $\mathcal{F} = (L, p, B)$ consists of a pair of connected complex manifolds L and B, and a proper holomorphic map $p : L \to B$ which is a submersion and whose fibers L_b are connected surfaces.*
*Let V be a connected compact complex surface. An **elementary deformation** of V parametrised by a complex contractible manifold B consists of a connected complex manifold L, a base point $b_0 \in B$, a family $\mathcal{F} = (L, p, B)$ and an injective morphism $i : V \to L$ such that $i(V) = L_{b_0}$.*
*A **result of an elementary deformation of** V is a connected complex surface which is a fiber of the map p.*
*On the set of complex surfaces, introduce the equivalence relation generated by elementary deformations and isomorphisms. Any surface belonging to the equivalent class of V is called a **deformation** of V.*
*Suppose that (V, c) is a real surface. An **elementary equivariant deformation** of (V, c) is an elementary deformation of V such that L (resp., B) is equipped with an antiholomorphic involution $Conj : L \to L$ (resp., $conj : B \to B$) satisfying $p \circ Conj = conj \circ p$, $conj(b_0) = b_0$ and $Conj \circ i = i \circ c$.*
On the set of real surfaces, introduce the equivalence relation generated by elementary equivariant deformations and real isomorphisms.

In [Hor93], Horikawa showed that any nonsingular algebraic surface of type $(1c)$ can be deformed to a nonsingular surface of degree 6 in $\mathbb{CP}^3$. The same result is true in the real category.

Proposition 4.2.3. (*see [Bih01]*)
Let Y be a nonsingular real algebraic surface of type $(1c)$. Then, there exists an equivariant deformation of Y to a nonsingular real surface X of degree 6 in $\mathbb{CP}^3$.

Proof. Consider the elementary equivariant deformation of $Y = Y_0$ determined by the family (Y_ε) for $\varepsilon \in \mathbb{R}$, where Y_ε is defined by the following system of equations:

$$\begin{cases} z_4^3 + f_2(z)z_4^2 + f_4(z)z_4 + f_6(z) = 0, \\ z_0z_3 - z_1z_2 - \varepsilon z_4 = 0. \end{cases}$$

As Y is a nonsingular surface, then for sufficiently small ε, the surface Y_ε is nonsingular. The system defining the surface Y_ε, for $\varepsilon \neq 0$, can be transformed into:

$$\begin{cases} (\frac{z_0z_3-z_1z_2}{\varepsilon})^3 + f_2(z)(\frac{z_0z_3-z_1z_2}{\varepsilon})^2 + f_4(z)(\frac{z_0z_3-z_1z_2}{\varepsilon}) + f_6(z) = 0, \\ \\ z_4 = \frac{z_0z_3-z_1z_2}{\varepsilon}. \end{cases}$$

Now, consider the projection

$$\begin{array}{rcl} p \ : \ \mathbb{CP}^4(2) \setminus \{(0:0:0:0:1)\} & \to & \mathbb{CP}^3 \\ (z_0 : z_1 : z_2 : z_3 : z_4) & \mapsto & (z_0 : z_1 : z_2 : z_3). \end{array}$$

For $\varepsilon \neq 0$, the point $(0:0:0:0:1) \in \mathbb{CP}^4(2)$ does not belong to Y_ε, hence $p|_{Y_\epsilon}$ is well defined. For $\varepsilon \neq 0$, the projection p produces a complex isomorphism between Y_ε and the algebraic surface X_ε of degree 6 in $\mathbb{CP}^3$ defined by the polynomial

$$(\frac{z_0z_3 - z_1z_2}{\varepsilon})^3 + f_2(z)(\frac{z_0z_3 - z_1z_2}{\varepsilon})^2 + f_4(z)(\frac{z_0z_3 - z_1z_2}{\varepsilon}) + f_6(z) = 0.$$

Moreover, this isomorphism is equivariant with respect to the involution c and the standard involution on $\mathbb{CP}^3$. □

Remark 4.2.4. *This deformation can be geometrically understood as a deformation of $\mathbb{CP}^3$ to the normal cone of a nonsingular quadric. (See for example [Ful98], Chapter 5 for the general process of deforming an algebraic variety to the normal cone of a subvariety).*

Remark 4.2.5. *Any surface of type (1c) is a hypersurface in the quadric defined by the equation $(z_0z_3 - z_1z_2 = 0)$ in $\mathbb{CP}^4(2)$. This quadric is a projective toric variety. In particular, one may use Viro's patchworking to produce real algebraic surfaces of type (1c).*

Let us describe a natural polytope which may be used to apply Viro's patchworking to produce real algebraic surfaces of type (1c). Consider the affine chart $\{z_0 = 1\} \subset \mathbb{CP}^4(2)$ with affine coordinates u_1, u_2, u_3 and u_4, where

$$u_i = \frac{z_i}{z_0},$$

for $1 \leq i \leq 3$ and

$$u_4 = \frac{z_4}{z_0^2}.$$

Thus, the affine coordinate ring of $(z_0z_3 - z_1z_2 = 0) \cap \{z_0 = 1\}$ is

$$\mathbb{R}[y_1, y_2, y_4] = \mathbb{R}[z_1, z_2, z_3, z_4]/(z_3 - z_1z_2),$$

where y_i is the image of z_i under the quotient map. In the chart $\{z_0 = 1\} \subset \mathbb{CP}^4(2)$, a system of equations for a surface of type (1c) is:

$$\begin{cases} z_4^3 + f_2(z)z_4^2 + f_4(z)z_4 + f_6(z) = 0, \\ z_3 - z_1z_2 = 0, \end{cases}$$

where $f_{2i}(z)$ is a polynomial of degree $2i$ in the variables z_1, z_2, z_3. Passing to $\mathbb{R}[y_1, y_2, y_4]$, we get a single equation

$$\tilde{f}(y) = y_4^3 + \tilde{f}_2(z)z_4^2 + \tilde{f}_4(z)z_4 + \tilde{f}_6(z) = 0,$$

where $\tilde{f}_{2i} \in \mathbb{R}[y_1, y_2]$. One can see that the Newton polytope of a generic polynomial $\tilde{f}_{2i}(y)$ is the square

$$Conv\left((0,0),(2i,0),(0,2i),(2i,2i)\right)$$

in $\mathbb{R}^2$. Then the Newton polytope of a generic polynomial $\tilde{f}(y)$ is the polytope

$$Q = Conv\left((0,0,0),(6,0,0),(6,6,0),(0,6,0),(0,0,3)\right)$$

in $\mathbb{R}^3$ (see Figure 4.1).

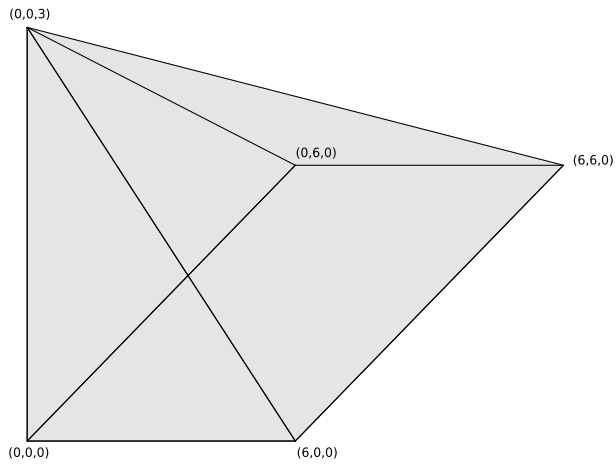

Figure 4.1 – Polytope Q.

4.3 Construction of a surface X of degree 6 with 45 handles

Proposition 4.3.1. *There exists a real algebraic surface Y of type* (1c) *such that*

$$\mathbb{R}Y \simeq 4S \amalg 2S_2 \amalg S_{41}.$$

Proof of Theorem 4.1.1. Performing the equivariant deformation described in Proposition 4.2.3 to the surface Y, we obtain a real algebraic surface X of degree 6 in $\mathbb{CP}^3$, such that

$$\mathbb{R}X \simeq 4S \amalg 2S_2 \amalg S_{41}.$$

□

The rest of this chapter is devoted to the proof of Proposition 4.3.1. Our strategy is first to describe a T-construction of an auxilliary surface Z of Newton polytope Q. Then, we use general Viro's method to modify slightly the construction.

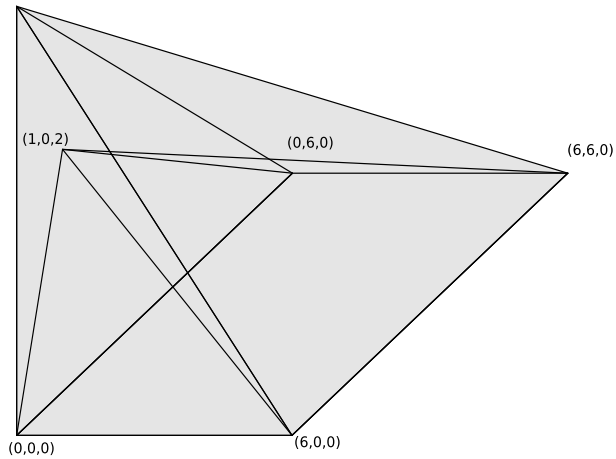

Figure 4.2 – Cone C.

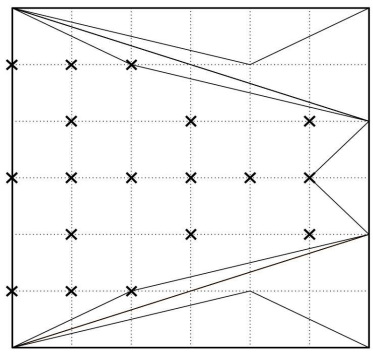

Figure 4.3 – The fixed part of a triangulation of Q_0 and the distribution of signs. A point gets a sign + if and only if it is ticked.

4.3.1 The auxilliary surface Z

We describe a triangulation τ of Q and a distribution of signs $D(\tau)$ at the vertices of τ. Consider the cone C with vertex $(1,0,2)$ over the square $Q_0 = Q \cap \{w = 0\}$ (see Figure 4.2). Take any primitive convex triangulation of Q_0 containing the edges depicted in Figure 4.3. Then, triangulate C into the cones with vertex $(1,0,2)$ over the triangles of the triangulation of Q_0. The triangulation of the cone C contains 12 edges of length 2 (edges joining $(1,0,2)$ to the points of coordinates $(1,0) \mod 2$ inside Q_0). For the three edges $[(1,0,2),(1,0,0)]$, $[(1,0,2),(3,0,0)]$ and $[(1,0,2),(5,0,0)]$ of length 2, refine the triangulation as explained in Definition 2.1.16.
Consider the tetrahedra α_1 and α_2 with vertices $(1,0,2),(6,6,0),(4,0,1),(6,0,0)$ and $(1,0,2),(0,6,0),(0,0,1),(0,0,0)$ respectively. See Figure 4.4 for a picture of α_1. Triangulate α_1 into the cones with vertex $(4,0,1)$ over the triangles in the triangulation of the triangle with vertices $(1,0,2),(6,6,0),(6,0,0)$. Triangulate α_2 into the cones with vertex $(0,0,1)$ over the triangles in the triangulation of the triangle with vertices $(1,0,2),(0,6,0),(0,0,0)$. All the tetrahedra of the triangulations constructed are primitive.
Consider the tetrahedra β_1 and β_2 with vertices $(1,0,2),(6,6,0),(4,4,1),(4,0,1)$ and $(1,0,2),(0,6,0),(0,4,1),(0,0,1)$ respectively. See Figure 4.5 for a picture of β_1. Triangulate

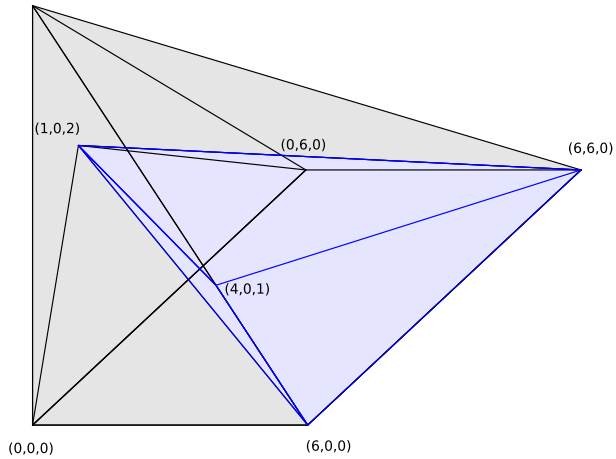

Figure 4.4 – Tetrahedron α_1.

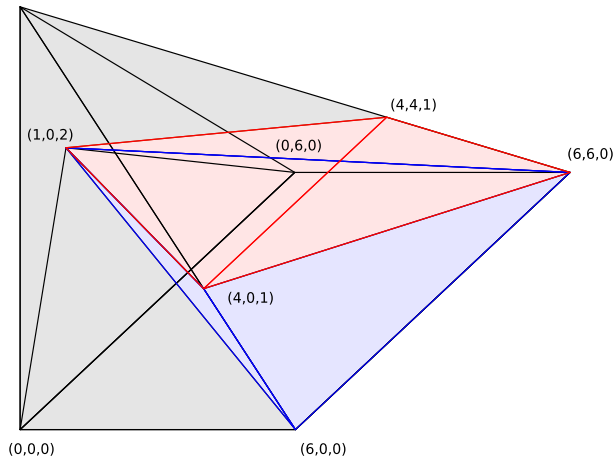

Figure 4.5 – Tetrahedron β_1.

β_1 and β_2 into 4 tetrahedra, respectively, using the subdivision of the segments $[(4,4,1),(4,0,1)]$ and $[(0,4,1),(0,0,1)]$ into four primitive edges. All the tetrahedra of the triangulations of β_1 and β_2 are primitive.
Consider the tetrahedron γ_1 with vertices $(1,0,2),(6,6,0),(4,4,1),(0,4,1)$, see Figure 4.6. Triangulate γ_1 into 4 tetrahedra, using the subdivision of the segment $[(4,4,1),(0,4,1)]$. All the tetrahedra of the triangulation of γ_1 are of volume 2.
Consider the tetrahedron γ_2 with vertices $(1,0,2),(6,6,0),(0,6,0),(0,4,1)$. The triangle with vertices $(1,0,2),(6,6,0),(0,6,0)$ is already triangulated. Use this triangulation to subdivise γ_2. Finally, for the three edges $[(1,0,2),(1,6,0)]$, $[(1,0,2),(3,6,0)]$ and $[(1,0,2),(5,6,0)]$ of length 2, refine the triangulation as explained in Definition 2.1.16.
At the present time, the part lying under the cone with vertex $(1,0,2)$ over $Q \cap \{w=1\}$ is triangulated (see Figure 4.7). Consider the pentagon

$$P = Conv\left((1,0,2),(2,0,2),(2,2,2),(1,2,2),(0,1,2)\right),$$

and triangulate it with any primitive convex triangulation and consider the two cones over it with vertex $(0,0,3)$ and $(4,4,1)$ respectively (see Figure 4.8). Complete the triangulation considering the following tetrahedra:

- The joint of the segment $[(4,0,1),(4,4,1)]$ and $[(1,0,2),(2,0,2)]$ triangulated into 4

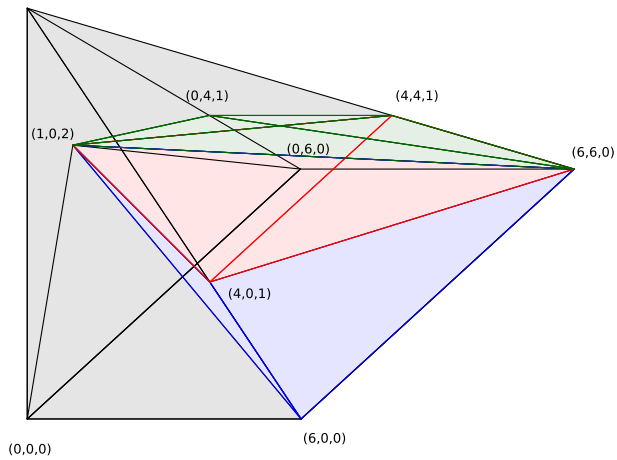

Figure 4.6 – Tetrahedron γ_1.

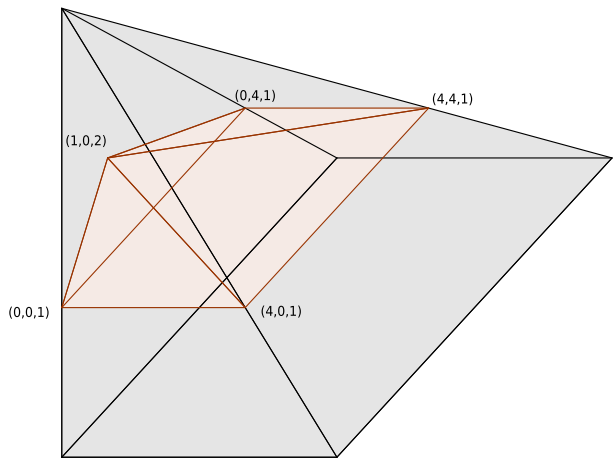

Figure 4.7 – Cone over $Q \cap \{w = 1\}$.

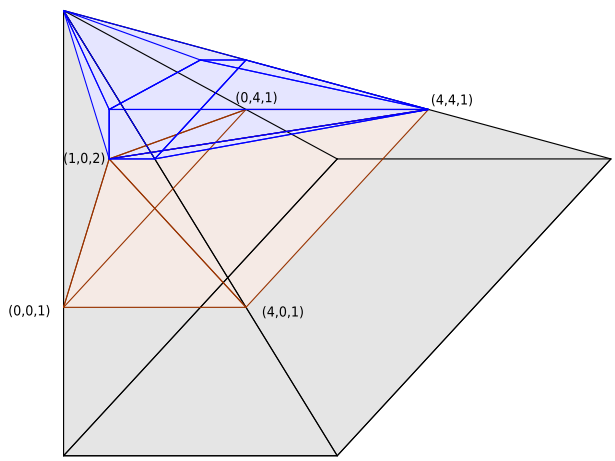

Figure 4.8 – Cones over the pentagon P.

primitive tetrahedra, using the triangulation of the segment $[(4,0,1),(4,4,1)]$ into 4 edges.

- The joint of the segment $[(0,4,1),(4,4,1)]$ and $[(0,1,2),(0,2,2)]$ triangulated into 4 primitive tetrahedra, using the triangulation of the segment $[(0,4,1),(4,4,1)]$ into 4 edges.

- The joint of the segment $[(0,4,1),(4,4,1)]$ and $[(1,0,2),(0,1,2)]$ triangulated into 4 primitive tetrahedra, using the triangulation of the segment $[(0,4,1),(4,4,1)]$ into 4 edges.

- The two cones over the triangle $(0,0,2),(1,0,2),(0,1,2)$ with vertices $(0,0,1)$ and $(0,0,3)$, respectively.

- The two cones over the triangle $(0,1,2),(0,2,2),(1,2,2)$ with vertices $(0,4,1)$ and $(0,0,3)$, respectively.

Denote by ρ the obtained subdivision of Q. To show the convexity of ρ, one can proceed as in [Ite97]. First, remark that the "coarse" subdivision given by the cone C, the tetrahedra α_i, the tetrahedra β_i, the tetrahedra γ_i, the cones over the pentagon S and the remaining three joints and two cones is convex. Denote by ν' a convex piecewise-linear function certifying the convexity of this "coarse" subdivision.
Choose three convex functions ν_1, ν_2 and ν_3 certifying the convexity of the subdivision of the three edges $[(0,0,1),(0,4,1)]$, $[(0,4,1),(4,4,1)]$ and $[(4,4,1),(4,0,1)]$. Choose also a convex function ν_4 certifying the convexity of the chosen subdivision of the pentagon and a convex function ν_5 certifying the convexity of the chosen subdivision of the cone C.
Consider a piecewise-linear function $\nu : Q \to \mathbb{R}$ which is affine-linear on each tetrahedron of the subdivision ρ and takes the value $\nu'(x) + \sum \epsilon_i \nu_i(x)$ at every vertex x. The function ν for positive sufficiently small ϵ_i certifies the convexity of the subdivision ρ.
Define the distribution of signs $D(\tau)$ at the vertices of τ. For the points inside Q_0, take the distribution of signs shown in Figure 4.3. Denote by A a T-curve in $\mathbb{P}^1 \times \mathbb{P}^1$ obtained from the triangulation τ and the distribution $D(\tau)$ restricted to Q_0. The chart of A is depicted in Figure 4.12 b). The distribution of signs at the vertices of τ belonging to $Q \cap \{w \geq 1\}$ is summarized in Figure 4.9. The point $(0,0,3)$ gets the sign $+$.

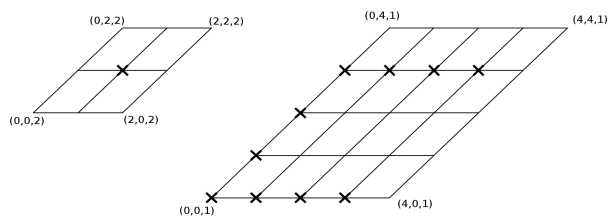

Figure 4.9 – Distibution of signs for $w = 1$ and $w = 2$. A point gets a sign $+$ if and only if it is ticked.

Let us compute the Euler characteristic $\chi(\mathbb{R}Z)$ of $\mathbb{R}Z$. The triangulation τ contains 6

edges of length 2 with endpoints of opposite signs, and some tetrahedra of volume 2 in γ_1 and in the cone C. Since all the other tetrahedra are elementary and the stars of the 6 edges of length 2 are disjoint, we can use Propositions 2.2.4 and 2.2.5 to compute $\chi(\mathbb{R}Z)$. In γ_1 all the signs are positive, and in the cone C, six tetrahedra of volume 2 have negative product of signs. One obtains:

$$\chi(\mathbb{R}Z) = \sigma(\mathbb{C}Z) + 12 = -52.$$

4.3.2 The surface Y

To construct the surface Y, we use the real trigonal curve $(C_3 = 0)$ constructed by Brugallé in [Bru06]. The Newton polytope of the polynomial C_3 is

$$Conv((0,0),(6,0),(0,3),(6,1))$$

and the chart of C_3 is depicted in Figure 4.10.

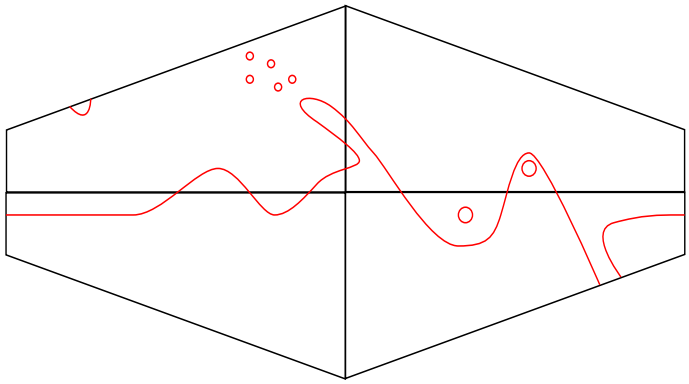

Figure 4.10 – Chart of $(C_3 = 0)$.

Denote by Γ the hexagon $Conv((0,0),(4,1),(6,2),(6,4),(4,5),(0,6))$. Consider the charts of the polynomials

- $y^3C_3(x,y)$, $y^3C_3(x,\frac{1}{y})$,
- $y^6b(x^3\frac{1}{y}, x^4\frac{1}{y})$, $b(x^3y, x^4y)$,

where $b(x,y) = y + (x+x_1)(x+x_2)$, with x_1, x_2 appropriately chosen so that the restrictions of the polynomials $C_3(x,y)$ and $y^3b(x^3\frac{1}{y}, x^4\frac{1}{y})$ to $Conv((0,3);(6,1))$ are equal. In particular, $x_1 \neq x_2$ and $x_1, x_2 > 0$. By Viro's patchworking theorem, there exists a polynomial P of Newton polytope Γ whose chart is depicted in Figure 4.11. To construct the surface Y, apply the general Viro's patchworking inside Q with

- the chart of $xz^2 + P(x,y)$ inside $Conv(\Gamma,(1,0,2))$,
- the same triangulation and distribution of signs as in Section 4.3.1 outside $Conv(\Gamma,(1,0,2))$.

Denote by $\widehat{A}$ the curve in $\mathbb{P}^1 \times \mathbb{P}^1$ obtained as the intersection of Y with the toric divisor corresponding to the face Q_0. See Figure 4.12 a).

Let us now compute the Euler characteristic of $\mathbb{R}Y$. To compute it, we compare the Euler characteristics of $\mathbb{R}Z$ and $\mathbb{R}Y$. First of all, denote Z_1 (resp., Y_1) the surfaces constructed in the same way as Z (resp., Y) but where the six edges $[(1,0,2),(1,0,0)]$,

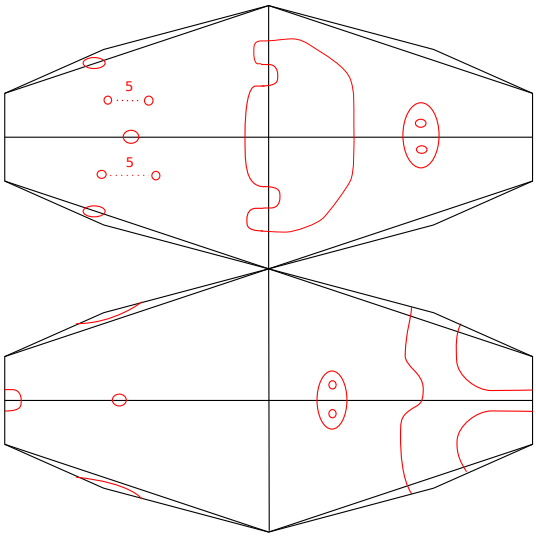

Figure 4.11 – Chart of the polynomial P.

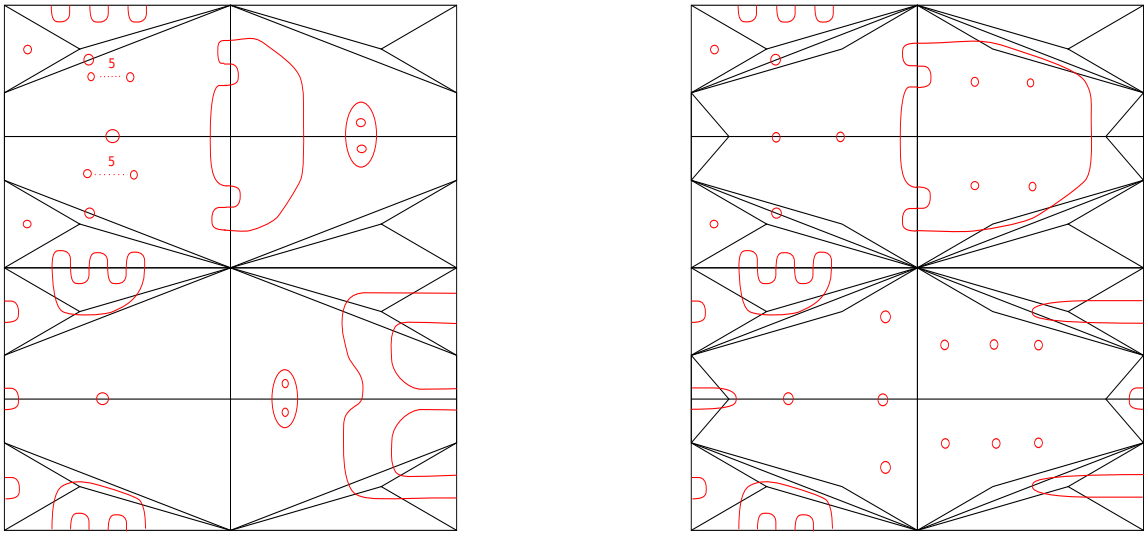

a) **b)**

Figure 4.12 – a): $\mathbb{R}\widehat{A}$ b): $\mathbb{R}A$

$[(1,0,2),(3,0,0)]$, $[(1,0,2),(5,0,0)]$, $[(1,0,2),(1,6,0)]$, $[(1,0,2),(3,6,0)]$ and $[(1,0,2),(5,6,0)]$ are not refined. From Proposition 2.2.5, one obtains

$$\chi(\mathbb{R}Y) - \chi(\mathbb{R}Z) = \chi(\mathbb{R}Y_1) - \chi(\mathbb{R}Z_1).$$

Recall that C is the cone with vertex $(1,0,2)$ over the square $Q_0 = Q \cap \{w = 0\}$ (see Figure 4.2). Notice that outside of C, the triangulation and distribution of signs defining Z_1 and Y_1 coincide. Recall that A is the curve in $\mathbb{P}^1 \times \mathbb{P}^1$ obtained as the intersection of Z with the toric divisor corresponding to the face Q_0. Denote by Z_2 (resp., Y_2) the surfaces with Newton polytope C, defined by $(A(x,y) + xz^2 = 0)$ (resp., $(\widehat{A}(x,y) + xz^2 = 0)$) and compactified in $Tor(C)$. The surface Y_2 (resp., Z_2) is a double cover of $Tor(Q_0) = \mathbb{P}^1 \times \mathbb{P}^1$ ramified along $(x = 0) \cup (x = \infty) \cup \{\widehat{A} = 0\}$ (resp., $(x = 0) \cup (x = \infty) \cup \{A = 0\}$). These surfaces are singular, with 12 ordinary double points. These double points are

located on the intersection of the surface with the "lines at infinity" ($x = 0$) (resp., ($x = \infty$)) corresponding to the edges $[(0,0,0),(0,6,0)]$ (resp., $[(6,0,0),(6,6,0)]$). These "lines" are also singular in the toric variety associated to C. Remark that Y_2 and Z_2 are non-degenerated with respect to $Tor(C)$.

Proposition 4.3.2. *One has the following equality:*

$$\chi(\mathbb{R}Y_2) - \chi(\mathbb{R}Z_2) = \chi(\mathbb{R}Y_1) - \chi(\mathbb{R}Z_1).$$

Proof. Denote by $C(Y_2)$ the chart of the polynomial $\hat{A}(x,y)+xz^2$, and by $C(Z_2)$ the chart of the polynomial $A(x,y)+xz^2$ (see Definition 2.2.6). Observe that for any edge E of C, the restriction of the polynomial $\hat{A}(x,y)+xz^2$ to E coincide with the restriction of $A(x,y)+xz^2$ to E. It follows that

$$\chi(\mathbb{R}Y_2) - \chi(C(Y_2)) = \chi(\mathbb{R}Z_2) - \chi(C(Z_2)).$$

By construction and by Theorem 2.2.7, there exists some charts $C_1, \cdots, C_n$ such that

- $\mathbb{R}Z_1 \simeq \pi_Q\left(C(Z_2) \cup (\cup_{i=1}^n C_i)\right)$,
- $\mathbb{R}Y_1 \simeq \pi_Q\left(C(Y_2) \cup (\cup_{i=1}^n C_i)\right)$.

It follows that

$$\chi(\mathbb{R}Y_1) - \chi(C(Y_2)) = \chi(\mathbb{R}Z_1) - \chi(C(Z_2)).$$

So finally

$$\chi(\mathbb{R}Y_2) - \chi(\mathbb{R}Z_2) = \chi(\mathbb{R}Y_1) - \chi(\mathbb{R}Z_1).$$

□

It remains to compute $\chi(\mathbb{R}Y_2)$ and $\chi(\mathbb{R}Z_2)$. Topologically, $\mathbb{R}Z_2$ is obtained by taking in the quadrant $++$ and $+-$ (resp., $-+$ and $--$) the disjoint union of two copies of ($A \leq 0$) (resp., ($A \geq 0$)) attached to each other by the identity map of $(A = 0) \cup (x = 0) \cup (x = \infty)$. The same holds for $\mathbb{R}Y_2$ by replacing A with $\widehat{A}$, see Figure 4.13. By a direct computation, we obtain

$$\chi(\mathbb{R}Y_2) = 2(-18) - 12 = -48,$$

and

$$\chi(\mathbb{R}Z_2) = 2(-6) - 12 = -24.$$

Then,

$$\chi(\mathbb{R}Y) - \chi(\mathbb{R}Z) = \chi(\mathbb{R}Y_2) - \chi(\mathbb{R}Z_2) = -24.$$

So finally

$$\chi(\mathbb{R}Y) = \chi(\mathbb{R}Z) - 24 = -52 - 24 = -76.$$

Moreover, $\mathbb{R}Y$ contains two components homeomorphic to S_2 coming from the double covering of $(\widehat{A} > 0)$. Note that the vertices $(1,1,2),(1,3,1),(2,3,1)$ and $(3,3,1)$ have the following property: all the vertices of the triangulation connected to one of these vertices by an edge have the sign $+$, while the vertices $(1,1,2),(1,3,1),(2,3,1)$ and $(3,3,1)$ have the sign $-$. Thus, $\mathbb{R}Y$ contains also four spheres. There is at least one component of $\mathbb{R}Y$ more: this component intersects the plane $\{u = 0\}$. Moreover, $\mathbb{R}Y$ cannot have more components, otherwise Y would be an M-surface, but $\chi(\mathbb{R}Y)$ does not satisfy the Rokhlin congruence. Finally, from $\chi(\mathbb{R}Y) = -76$, we obtain

$$\mathbb{R}Y \simeq 4S \amalg 2S_2 \amalg S_{41}.$$

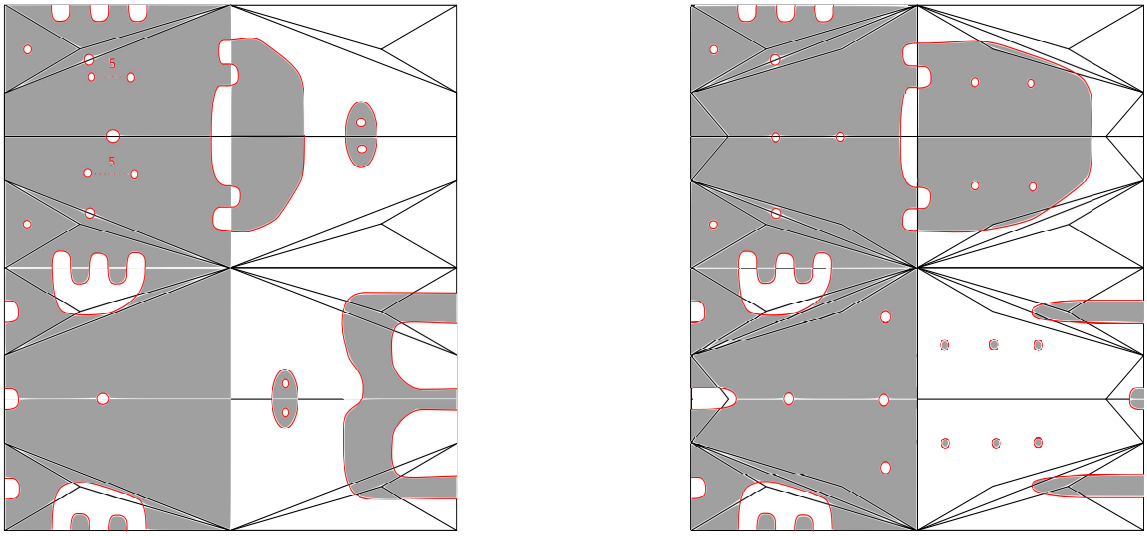

a) **b)**

Figure 4.13 – a): $(\widehat{A}(x,y)x < 0)$ b): $(A(x,y)x < 0)$

Chapter 5

Real algebraic surfaces in $(\mathbb{CP}^1)^3$ with many handles

5.1 Introduction and statement of results

In this chapter, we focus on real algebraic surfaces in $(\mathbb{CP}^1)^3$. A real algebraic surface X in $(\mathbb{CP}^1)^3$ of tridegree (d_1, d_2, d_3) is the zero set of a real polynomial

$$P \in \mathbb{R}\left[u_1, v_1, u_2, v_2, u_3, v_3\right]$$

homogeneous of degree d_i in the variables (u_i, v_i), for $1 \leq i \leq 3$. Up to change of coordinates, one can always assume that $d_1 \geq d_2 \geq d_3$. Introduce the projection $\pi : (\mathbb{CP}^1)^3 \to (\mathbb{CP}^1)^2$ on the first two factors. If X is an algebraic surface of tridegree $(d_1, d_2, 1)$ in $(\mathbb{CP}^1)^3$, then $\pi|_X$ is of degree 1, and X is birationaly equivalent to $(\mathbb{CP}^1)^2$. Hence $h^{2,0}(X) = 0$, so Viro's conjecture is true for real algebraic surfaces of tridegree $(d_1, d_2, 1)$ in $(\mathbb{CP}^1)^3$. Assume now that X is of tridegree $(d, 2, 2)$. The projection $\tilde{\pi} : (\mathbb{CP}^1)^3 \to \mathbb{CP}^1$ on the first factor induces an elliptic fibration on X. Kharlamov proved (see [AM08]) that Viro's conjecture is true for elliptic surfaces. Thus, Viro's conjecture is true for real algebraic surfaces of tridegree $(d, 2, 2)$ in $(\mathbb{CP}^1)^3$.
Let X be a real algebraic surface of tridegree $(4, 4, 2)$ in $(\mathbb{CP}^1)^3$. One has $h^{2,0}(X) = 9$, $h^{1,1}(X) = 84$, $\sigma(X) = -64$ and $b_*(X) = 104$. Therefore, using Smith-Thom inequality and one of the two Comessatti inequalities, one obtains

$$b_1(\mathbb{R}X) \leq 92 = h^{1,1}(X) + 8.$$

We prove the following result in Section 5.5.

Theorem 5.1.1. *There exists a real algebraic surface X of tridegree $(4, 4, 2)$ in $(\mathbb{CP}^1)^3$ such that*

$$\mathbb{R}X \simeq 3S \coprod 2S_2 \coprod S_{40}.$$

The surface X is an $(M-2)$-surface satisfying

$$b_1(\mathbb{R}X) = 88 = h^{1,1}(X) + 4.$$

The existence of a real algebraic surface of tridegree $(4, 4, 2)$ in $(\mathbb{CP}^1)^3$ satisfying $90 \leq b_1(\mathbb{R}X) \leq 92$ is still unknown. For $d \geq 3$, the existence of a real algebraic surface of tridegree $(d, 3, 2)$ in $(\mathbb{CP}^1)^3$ disproving Viro's conjecture is also unknown.

In Section 5.4, we focus on the asymptotic behaviour of the first Betti number for real algebraic surfaces of tridegree $(d_1, d_2, 2)$ in $(\mathbb{CP}^1)^3$. Let X be a real algebraic surface of tridegree $(d_1, d_2, 2)$ in $(\mathbb{CP}^1)^3$. One has

$$h^{2,0}(X) = d_1 d_2 - d_1 - d_2 + 1,$$

and

$$h^{1,1}(X) = 6d_1 d_2 - 2d_1 - 2d_2 + 4.$$

If $\mathcal{S}_{d_1,d_2}$ denotes the set of nonsingular real algebraic surfaces of tridegree $(d_1, d_2, 2)$ in $(\mathbb{CP}^1)^3$, then it follows from Smith-Thom inequality and one of the two Comessatti inequalities that

$$\max_{X \in \mathcal{S}_{d_1,d_2}} b_1(\mathbb{R}X) \leq 7d_1 d_2 - 3d_1 - 3d_2 + 5.$$

We prove the following result in Section 5.4.

Theorem 5.1.2. *There exists a family $(X_{k,l})$ of nonsingular real algebraic surfaces of tridegree $(2k, 2l, 2)$ in $(\mathbb{CP}^1)^3$, and $A, B, c, d, e \in \mathbb{Z}$ such that for all $k \geq A$ and for all $l \geq B$, one has*

$$b_1(\mathbb{R}X_{k,l}) \geq 7 \cdot 2k \cdot 2l - c \cdot 2k - d \cdot 2l + e.$$

This chapter is organized as follows. In Section 5.2, we discuss orientability of closed two-dimensional submanifolds of $(\mathbb{RP}^1)^3$. In Section 5.3, we present a way to construct a surface of degree $(2k, 2l, 2)$ in $(\mathbb{CP}^1)^3$ as a small perturbation of a double covering of a blow-up of $(\mathbb{CP}^1)^2$. In Section 5.4, we prove Theorem 5.1.2 and in Section 5.5 we prove Theorem 5.1.1. In Section 5.6, we recall the Brusotti theorem and prove a transversality theorem needed in our construction.

5.2 Orientability of closed two-dimensional submanifolds of $(\mathbb{RP}^1)^3$

Identify $H_2\left((\mathbb{RP}^1)^3\,;\,\mathbb{Z}/2\mathbb{Z}\right)$ with $(\mathbb{Z}/2\mathbb{Z})^3$ by considering generators x_1, x_2, x_3 given by

- $x_1 = \left[\{p\} \times \mathbb{RP}^1 \times \mathbb{RP}^1\right]$,
- $x_2 = \left[\mathbb{RP}^1 \times \{p\} \times \mathbb{RP}^1\right]$,
- $x_3 = \left[\mathbb{RP}^1 \times \mathbb{RP}^1 \times \{p\}\right]$.

Identify $H_1\left((\mathbb{RP}^1)^3\,;\,\mathbb{Z}/2\mathbb{Z}\right)$ with $(\mathbb{Z}/2\mathbb{Z})^3$ by considering generators y_1, y_2, y_3 given by

- $y_1 = \left[\mathbb{RP}^1 \times \{p\} \times \{q\}\right]$,
- $y_2 = \left[\{p\} \times \mathbb{RP}^1 \times \{q\}\right]$,
- $y_3 = \left[\{p\} \times \{q\} \times \mathbb{RP}^1\right]$.

With these identifications, the intersection product

$$H_2\left((\mathbb{RP}^1)^3\,;\,\mathbb{Z}/2\mathbb{Z}\right) \times H_1\left((\mathbb{RP}^1)^3\,;\,\mathbb{Z}/2\mathbb{Z}\right) \to \mathbb{Z}/2\mathbb{Z}$$

is given by the following map:

$$\begin{array}{rccc} Q & : & (\mathbb{Z}/2\mathbb{Z})^3 \times (\mathbb{Z}/2\mathbb{Z})^3 & \to & \mathbb{Z}/2\mathbb{Z} \\ & & ((a_1, a_2, a_3), (b_1, b_2, b_3)) & \mapsto & a_1 b_1 + a_2 b_2 + a_3 b_3. \end{array}$$

If X is a real algebraic surface of tridegree (d_1, d_2, d_3) in $(\mathbb{CP}^1)^3$, it follows from the identifications made above that the homology class of $\mathbb{R}X$ is represented in $(\mathbb{Z}/2\mathbb{Z})^3$ by

$$[\mathbb{R}X] = (d_1 \mod 2\,, d_2 \mod 2\,, d_3 \mod 2)\,.$$

Consider the case of a real algebraic surface X of tridegree $(d_1, d_2, 1)$ in $(\mathbb{CP}^1)^3$. Such a surface is given by a polynomial

$$u_3 P(u_1, v_1, u_2, v_2) + v_3 Q(u_1, v_1, u_2, v_2),$$

where P and Q are homogeneous polynomials of degree d_i in the variables (u_i, v_i), for $1 \leq i \leq 2$. Assume that $\{P = 0\}$ and $\{Q = 0\}$ intersect transversely. The projection $\pi|_X$ on the two first factors identify X with the blow up of $(\mathbb{CP}^1)^2$ at the $2d_1d_2$ intersection points of $\{P = 0\}$ and $\{Q = 0\}$. If $2m$ points of intersections of $\{P = 0\}$ and $\{Q = 0\}$ are real, then

$$\mathbb{R}X \simeq (\mathbb{RP}^1 \times \mathbb{RP}^1)\#_{2m}\mathbb{RP}^2,$$

where $\#$ denotes the connected sum. In particular, the surface $\mathbb{R}X$ is orientable if and only if $m = 0$.

Proposition 5.2.1. *The Euler characteristic of any closed two-dimensional submanifold Z of $(\mathbb{RP}^1)^3$ is even.*

Proof. If $[Z] = 0 \in H_2\left((\mathbb{RP}^1)^3\,;\,\mathbb{Z}/2\mathbb{Z}\right)$, then Z is the boundary of a compact 3-manifold M in $(\mathbb{RP}^1)^3$. Since $(\mathbb{RP}^1)^3$ is orientable, the 3-manifold M is orientable and Z is also orientable. It follows that the Euler characteristic of Z is even. Assume now that $[Z] \neq 0 \in H_2\left((\mathbb{RP}^1)^3\,;\,\mathbb{Z}/2\mathbb{Z}\right)$. Up to a change of coordinates on $(\mathbb{RP}^1)^3$, one can assume that $[Z] = (1, a, b)$, with $a, b \in \mathbb{Z}/2\mathbb{Z}$. Consider a real algebraic surface S of tridegree $(1, a, b)$ transverse to Z. Then, one has $[Z \cup S] = [Z] + [S] = 0$, and the union $Z \cup S$ bounds in $(\mathbb{RP}^1)^3$. Thus, one can color the complement $(\mathbb{RP}^1)^3 \setminus (Z \cup S)$ into two colors in such a way that the components adjacent from the different sides to the same (two-dimensional) piece of $Z \cup S$ would be of different colors. It is a kind of checkerboard coloring. Consider the disjoint sum Q of the closures of those components of $(\mathbb{RP}^1)^3 \setminus (Z \cup S)$ which are colored with the same color. It is a compact 3-manifold, and it is oriented since each of the components inherits orientation from $(\mathbb{RP}^1)^3$. The boundary of this 3-manifold is composed of pieces of Z and S. It can be thought of as the result of cutting both surfaces along their intersection curve and regluing. The intersection curve is replaced by its two copies, while the rest part of Z and S does not change. Since the intersection curve consists of circles, its Euler characteristic is zero. Thus, one has

$$\chi(\partial Q) = \chi(Z) + \chi(S).$$

Since the surface S is the connected sum of an even number of copies of $\mathbb{RP}^2$, the Euler characteristic $\chi(S)$ of S is even. On the other hand, $\chi(\partial Q)$ is even since ∂Q inherits orientation from Q. Thus, one has

$$\chi(Z) = 0 \mod 2.$$

□

Proposition 5.2.1 implies that we cannot embed any connected sum of an odd number of copies of $\mathbb{RP}^2$ in $(\mathbb{RP}^1)^3$. One has the following characterisation of orientability.

Proposition 5.2.2. *Let Z be a two-dimensional submanifold of $(\mathbb{RP}^1)^3$. The manifold Z is nonorientable if and only if there exists a circle $\mathbb{S}^1 \hookrightarrow Z$ such that $[\mathbb{S}^1] \cdot [Z] = 1$, where*

$$[\mathbb{S}^1] \in H_1\left((\mathbb{RP}^1)^3\,;\,\mathbb{Z}/2\mathbb{Z}\right)$$

is the homology class of the circle $\mathbb{S}^1$ and

$$[Z] \in H_2\left((\mathbb{RP}^1)^3\,;\,\mathbb{Z}/2\mathbb{Z}\right)$$

is the homology class of the manifold Z.

Proof. The manifold Z is nonorientable if and only if there exists a disorienting circle $\mathbb{S}^1 \hookrightarrow Z$. Recall that $\mathbb{S}^1 \subset Z$ is a disorienting circle if and only if the normal bundle $\mathcal{N}_{\mathbb{S}^1,Z}$ of $\mathbb{S}^1$ in Z is nontrivial. On the other hand, one has the following equality:

$$\mathcal{N}_{\mathbb{S}^1,(\mathbb{RP}^1)^3} = \mathcal{N}_{\mathbb{S}^1,Z} \oplus \left(\mathcal{N}_{Z,(\mathbb{RP}^1)^3}\right)\Big|_{\mathbb{S}^1},$$

where $\mathcal{N}_{\mathbb{S}^1,(\mathbb{RP}^1)^3}$ denotes the normal bundle of $\mathbb{S}^1$ in $(\mathbb{RP}^1)^3$ and $\left(\mathcal{N}_{Z,(\mathbb{RP}^1)^3}\right)\Big|_{\mathbb{S}^1}$ denotes the restriction to $\mathbb{S}^1$ of the normal bundle of Z in $(\mathbb{RP}^1)^3$. The restriction of the tangent bundle of $(\mathbb{RP}^1)^3$ to $\mathbb{S}^1$ is the Whitney sum of the normal and the tangent bundle of $\mathbb{S}^1$. Thus, the normal bundle $\mathcal{N}_{\mathbb{S}^1,(\mathbb{RP}^1)^3}$ is trivial, so the normal bundle $\mathcal{N}_{\mathbb{S}^1,Z}$ is nontrivial if an only if the normal bundle $\left(\mathcal{N}_{Z,(\mathbb{RP}^1)^3}\right)\Big|_{\mathbb{S}^1}$ is nontrivial. One concludes that Z is nonorientable if and only if there exists an embedding $\mathbb{S}^1 \hookrightarrow Z$ such that $[\mathbb{S}^1] \cdot [Z] = 1$. □

Corollary 5.2.3. *Let X be a nonsingular real algebraic surface of degree $(k, l, 2)$ in $(\mathbb{CP}^1)^3$ given by a polynomial*

$$u_3^2 P + u_3 v_3 Q + v_3^2 R,$$

where P, Q and R are homogeneous polynomials of degree k in (u_1, v_1) and of degree l in (u_2, v_2). Then, $\mathbb{R}X$ is nonorientable if an only if there exists an embedding of a circle $\psi : \mathbb{S}^1 \hookrightarrow (\mathbb{RP}^1)^2$ such that

- $\psi(\mathbb{S}^1) \subset \{Q^2 - 4PR \geq 0\}$.
- *The homology class $[\psi(\mathbb{S}^1)] \in H_1\left((\mathbb{RP}^1)^2\,;\,\mathbb{Z}/2\mathbb{Z}\right)$ is represented by $(a, b) \in \mathbb{Z}/2\mathbb{Z}$ with $ak + bl = 1$.*

Proof. Notice that $\mathbb{R}X$ is homeomorphic to the disjoint union of two copies of $\{Q^2 - 4PR \geq 0\}$ attached to each other by a self-homeomorphism of $\{Q^2 - 4PR = 0\}$. Assume that the manifold $\mathbb{R}X$ is nonorientable. Then, by Proposition 5.2.2, there exists an embedding of a circle $\phi : \mathbb{S}^1 \hookrightarrow \mathbb{R}X$ such that the homology class

$$[\phi(\mathbb{S}^1)] \in H_1\left((\mathbb{RP}^1)^3\,;\,\mathbb{Z}/2\mathbb{Z}\right)$$

is represented by $(a, b, c) \in (\mathbb{Z}/2\mathbb{Z})^3$ with $ak + bl = 1$. Using a small perturbation of the embedding ϕ, one obtains an immersion $\pi \circ \phi$ of $\mathbb{S}^1$ in $(\mathbb{RP}^1)^2$, where $\pi : (\mathbb{RP}^1)^3 \to (\mathbb{RP}^1)^2$ denotes the projection on the two first factors. This immersion satisfies

- $\pi \circ \phi(\mathbb{S}^1) \subset \{Q^2 - 4PR \geq 0\}$ and
- $[\pi \circ \phi(\mathbb{S}^1)] = (a, b)$, with $ak + bl = 1$.

Perturbing arbitrarily each double point of $\pi \circ \phi(\mathbb{S}^1)$, one obtains a collection of circles $\mathbb{S}^1_1, \cdots, \mathbb{S}^1_n$, with $\left[\mathbb{S}^1_j\right] = (a_j, b_j) \in (\mathbb{Z}/2\mathbb{Z})^2$, such that

- $\mathbb{S}^1_j \subset \{Q^2 - 4PR \geq 0\}$, for all $1 \leq j \leq n$,
- $\sum_{j=1}^n a_j = a$ and $\sum_{j=1}^n b_j = b$.

Then there exists $1 \leq j \leq n$ such that $a_j k + b_j l = 1$.
Reciprocally, assume that there exists an embedding $\psi : \mathbb{S}^1 \hookrightarrow (\mathbb{RP}^1)^2$ such that

- $\psi(\mathbb{S}^1) \subset \{Q^2 - 4PR \geq 0\}$,
- $[\psi(\mathbb{S}^1)] = (a, b) \in (\mathbb{Z}/2\mathbb{Z})^2$ with $ak + bl = 1$.

Using a small perturbation of the embedding ψ, one can assume that

$$\psi(\mathbb{S}^1) \subset \{Q^2 - 4PR > 0\},$$

and that $\psi(\mathbb{S}^1)$ intersect $\{P = 0\}$ transversely. Over the set $\{Q^2 - 4PR > 0\}$, the map $\pi|_{\mathbb{R}X}$ is a two-to-one map. Then, the preimage of $\psi(\mathbb{S}^1)$ under the projection $\pi|_{\mathbb{R}X}$ is either a circle or a union of two circles. Consider

$$\mathbb{R}X \setminus \{P = 0\} \subset (\mathbb{RP}^1)^2 \times \mathbb{R}.$$

If $x \in \psi(\mathbb{S}^1) \setminus \{P = 0\}$, one can order the two preimages $s_1(x)$ and $s_2(x)$ of x under π so that the vertical coordinate of $s_1(x)$ is smaller than the vertical coordinate of $s_2(x)$. One can see that when x goes through $\{P = 0\}$, the order on $s_1(x)$ and $s_2(x)$ changes. Then, the preimage of $\psi(\mathbb{S}^1)$ under the projection $\pi|_{\mathbb{R}X}$ is a circle if and only if the number of intersections of $\psi(\mathbb{S}^1)$ with $\{P = 0\}$ is odd. Since $ak + bl = 1$, the preimage of $\psi(\mathbb{S}^1)$ is a circle, and it follows from Proposition 5.2.2 that $\mathbb{R}X$ is nonorientable. □

5.3 Double covering of certain blow-ups of $(\mathbb{CP}^1)^2$

We describe a method of construction of real algebraic surfaces in $(\mathbb{CP}^1)^3$ of tridegree $(2k, 2l, 2)$ for any (k, l) with $k \geq 1$ and $l \geq 1$. Consider a real algebraic surface Z in $(\mathbb{CP}^1)^3$ defined by the polynomial $P^2 + \varepsilon Q$, where P is a real polynomial of tridegree $(k, l, 1)$, the polynomial Q is a real polynomial of tridegree $(2k, 2l, 2)$ and ε is some small positive parameter. If $\{P = 0\}$ and $\{Q = 0\}$ are nonsingular and intersect transversely, the surface Z is also nonsingular, and it is a small deformation of the double covering of $\{P = 0\}$ ramified along $\{P = 0\} \cap \{Q = 0\}$. More precisely, the surface Z is obtained from an elementary equivariant deformation of the subvariety

$$Z_0 = \{U^2 + Q = 0\,,\ P = 0\} \subset (\mathbb{C}^*)^4$$

compactified in the toric variety associated to the cone with vertex $(0, 0, 0, 2)$ over the parallelepiped

$$Conv\left((2k, 0, 0), (0, 2l, 0), (2k, 2l, 0), (0, 0, 2), (2k, 0, 2), (0, 2l, 2), (2k, 2l, 2)\right).$$

This deformation is obtained via considering the family

$$Z_t = \{U^2 + Q = 0\,,\ P = tU\},$$

for $0 \leq t \leq \sqrt{\varepsilon}$. The real part $\mathbb{R}Z$ is homeomorphic to the disjoint union of two copies of $(\mathbb{RP}^1)^3 \cap \{P = 0\} \cap \{Q \leq 0\}$ attached to each other by the identity map of $(\mathbb{RP}^1)^3 \cap \{P = 0\} \cap \{Q = 0\}$. The polynomials P can be written in the following form:

$$P(u_i, v_i) = v_3 P_1(u_i, v_i) + u_3 P_0(u_i, v_i),$$

where P_0, P_1 are homogeneous polynomials of degree k in u_1, v_1 and of degree l in u_2, v_2. As explained in Section 5.2, the surface $\{P = 0\}$ is the blow-up of $(\mathbb{CP}^1)^2$ at the $2kl$ points of intersections of $\{P_0 = 0\}$ and $\{P_1 = 0\}$. Consider the real algebraic curve $\{P = 0\} \cap \{Q = 0\}$ in $(\mathbb{CP}^1)^3$ and consider its image D under the projection $\pi : (\mathbb{CP}^1)^3 \to (\mathbb{CP}^1)^2$ forgetting the last factor. Let us compute the bidegree of D. One can see that the intersection of $\{P = 0\}$ with $\mathbb{CP}^1 \times [0:1] \times \mathbb{CP}^1$ (resp., $[0:1] \times \mathbb{CP}^1 \times \mathbb{CP}^1$) is a curve of bidegree $(k, 1)$ (resp., $(l, 1)$). The intersection of $\{Q = 0\}$ with $\mathbb{CP}^1 \times [0:1] \times \mathbb{CP}^1$ (resp., $[0:1] \times \mathbb{CP}^1 \times \mathbb{CP}^1$) is a curve of bidegree $(2k, 2)$ (resp., $(2l, 2)$). Then the real algebraic curve $\{P = 0\} \cap \{Q = 0\}$ intersects $\mathbb{CP}^1 \times [0:1] \times \mathbb{CP}^1$ (resp., $[0:1] \times \mathbb{CP}^1 \times \mathbb{CP}^1$) in $4k$ points (resp., $4l$ points). Considering the projection π, one concludes that the real algebraic curve D is of bidegree $(4k, 4l)$. For $1 \leq i \leq 2kl$, denote by L_i the exceptional lines of $\{P = 0\}$ corresponding to the intersection points of $\{P_0 = 0\} \cap \{P_1 = 0\}$. Since the real algebraic surface $\{Q = 0\}$ is of tridegree $(2k, 2l, 2)$, it intersects any exceptional line L_i in exactly 2 points. Considering the projection π, one concludes that the real algebraic curve D has $2kl$ double points, one double point at each intersection point of $\{P_0 = 0\}$ and $\{P_1 = 0\}$. Conversely, one has the following proposition.

Proposition 5.3.1. *Let $\{P_0 = 0\}$ and $\{P_1 = 0\}$ be two nonsingular real algebraic curves of bidegree (k, l) in $(\mathbb{CP}^1)^2$ intersecting transversely in $2kl$ points. Let D be an irreducible real algebraic curve of bidegree $(4k, 4l)$ in $(\mathbb{CP}^1)^2$ with $2kl$ ordinary double points, one double point at each intersection point of $\{P_0 = 0\}$ and $\{P_1 = 0\}$. Consider the blow-up of $(\mathbb{CP}^1)^2$ at the $2kl$ points of intersections of $\{P_0 = 0\}$ and $\{P_1 = 0\}$, given by the polynomial*

$$P(u_i, v_i) = v_3 P_1(u_i, v_i) + u_3 P_0(u_i, v_i).$$

Then, there exists a real algebraic surface $\{Q = 0\}$ of tridegree $(2k, 2l, 2)$ in $(\mathbb{CP}^1)^3$ such that the strict transform of D in $\{P = 0\}$ is given by the intersection $\{P = 0\} \cap \{Q = 0\}$.

Proof. Denote by $x_1, ..., x_{2kl}$ the intersection points of $\{P_0 = 0\}$ and $\{P_1 = 0\}$. Denote by $\mathcal{A}$ the linear system of curves of bidegree $(4k, 4l)$ in $(\mathbb{CP}^1)^2$ with a singularity at each x_i. We first show that the space $\mathcal{A}$ is of codimension $6kl$ in the space of curves of bidegree $(4k, 4l)$ in $(\mathbb{CP}^1)^2$. Denote by C_0 the curve $\{P_0 = 0\}$. One has the following exact sequence of sheaves:

$$0 \to \mathcal{O}_{\mathbb{P}^1 \times \mathbb{P}^1}(D - C_0) \to \mathcal{O}_{\mathbb{P}^1 \times \mathbb{P}^1}(D) \to \mathcal{O}_{C_0}(D\,|_{C_0}) \to 0,$$

where $\mathcal{O}_{\mathbb{P}^1 \times \mathbb{P}^1}(D - C_0)$ is the invertible sheaf associated to the divisor $D - C_0$, the sheaf $\mathcal{O}_{\mathbb{P}^1 \times \mathbb{P}^1}(D)$ is the invertible sheaf associated to the divisor D, and $\mathcal{O}_{C_0}(D\,|_{C_0})$ denotes the restriction of $\mathcal{O}_{\mathbb{P}^1 \times \mathbb{P}^1}(D)$ to C_0. Since the divisor $D - C_0$ is of bidegree $(3k, 3l)$, for any $k > 0$ and $l > 0$ the invertible sheaf $\mathcal{O}_{\mathbb{P}^1 \times \mathbb{P}^1}(D - C_0)$ is generated by its sections and one has $H^1(\mathbb{P}^1 \times \mathbb{P}^1, \mathcal{O}_{\mathbb{P}^1 \times \mathbb{P}^1}(D - C_0)) = 0$ (see for example [Ful93]). Thus, the long exact sequence in cohomology associated to the above exact sequence splits. The first part of the long exact sequence is the following:

$$0 \to H^0(\mathbb{P}^1 \times \mathbb{P}^1, \mathcal{O}(D - C_0)) \to H^0(\mathbb{P}^1 \times \mathbb{P}^1, \mathcal{O}(D)) \xrightarrow{r} H^0(C_0, \mathcal{O}(D\,|_{C_0})) \to 0,$$

where r is the restriction map. Denote by

$$E(x_1, \cdots, x_{2kl}) \subset H^0(\mathbb{P}^1 \times \mathbb{P}^1, \mathcal{O}(D))$$

the set of sections vanishing at least at order 2 at $x_1, \cdots, x_{2kl}$. Then

$$\mathcal{A} = \mathbb{P}(E(x_1, \cdots, x_{2kl})).$$

Put $F(x_1, \cdots, x_{2kl}) = r(E(x_1, \cdots, x_{2kl}))$. Denote by

$$G(x_1, \cdots, x_{2kl}) \subset H^0(\mathbb{P}^1 \times \mathbb{P}^1, \mathcal{O}(D - C_0))$$

the set of sections vanishing at $x_1, \cdots, x_{2kl}$. One has then the following exact sequence:

$$0 \to G(x_1, \cdots, x_{2kl}) \to E(x_1, \cdots, x_{2kl}) \to F(x_1, \cdots, x_{2kl}) \to 0.$$

Define on C_0 the divisor

$$D' = D \cap C_0 - E,$$

where

$$E = \left\{ 2 \sum_{i=1}^{2kl} x_i \right\}.$$

By definition of r, the set $F(x_1, \cdots, x_{2kl})$ is the subspace of $H^0(C_0, \mathcal{O}_{C_0}(D \cap C_0))$ of sections vanishing at least at order 2 at $x_1, \cdots, x_{2kl}$. Consider the exact sheaf sequence

$$0 \to \mathcal{O}_{C_0}(D') \to \mathcal{O}_{C_0}(D \cap C_0) \to \mathcal{O}_E(D \cap C_0 \mid_E) \to 0,$$

and consider the associated long exact sequence

$$0 \to H^0(C_0, \mathcal{O}_{C_0}(D')) \to H^0(C_0, \mathcal{O}_{C_0}(D \cap C_0)) \xrightarrow{r'} H^0(E, \mathcal{O}(D \cap C_0 \mid_E)) \to \cdots$$

Thus, one sees that $F(x_1, \cdots, x_{2kl}) = \ker r'$ is identified with $H^0(C_0, \mathcal{O}_{C_0}(D'))$.
Let us compute $h^0(C_0, D')$. The divisor D' is of degree $4kl$. Moreover, one has

$$\begin{aligned} \deg(K_{C_0} - D') &= -\deg(D') + \deg(K_{C_0}) \\ &= -\deg(D') - 2 + 2g(C_0) \\ &= -4kl - 2 + 2(k-1)(l-1) \\ &= -2kl - 2k - 2l. \end{aligned}$$

But $-2kl - 2k - 2l < 0$, so $h^0(C_0, K_{C_0} - D') = 0$, and by Riemann-Roch formula, one gets

$$\begin{aligned} h^0(C_0, D') &= \deg(D') + 1 - g(C_0) \\ &= 4kl + 1 - (k-1)(l-1) \\ &= 3kl + k + l. \end{aligned}$$

Therefore, one has

$$\dim(E(x_1, ..., x_{2kl})) = 3kl + k + l + \dim(G(x_1, ..., x_{2kl})).$$

Now, compute $\dim(G(x_1, ..., x_{2kl})$. Consider the following exact sequence:

$$0 \to \mathcal{O}_{\mathbb{P}^1 \times \mathbb{P}^1}(D - C_0^2) \to \mathcal{O}_{\mathbb{P}^1 \times \mathbb{P}^1}(D - C_0) \to \mathcal{O}_{C_0}((D - C_0) \mid_{C_0}) \to 0.$$

Passing to the long exact sequence, one obtains:

$$0 \to H^0(\mathbb{P}^1 \times \mathbb{P}^1, \mathcal{O}(D - C_0^2)) \to G(x_1, ..., x_{2kl}) \to r(G(x_1, ..., x_{2kl})) \to 0.$$

With a similar computation as before, one sees that

$$\begin{aligned} \dim(r(G(x_1, ..., x_{2kl})) &= 4kl + 1 - (k-1)(l-1) \\ &= 3kl + k + l. \end{aligned}$$

On the other hand, $h^0(\mathbb{P}^1 \times \mathbb{P}^1, D - C_0^2) = (2k+1)(2l+1) - 1$. So finally,

$$\begin{aligned} \dim(E(x_1, ..., x_{2kl})) &= 3kl + k + l + 3kl + k + l + 4kl + 2k + 2l \\ &= 10kl + 4k + 4l, \end{aligned}$$

and $\operatorname{codim}(\mathcal{A}) = 6kl$. Denote by $\tilde{\mathcal{A}}$ the linear system of curves obtained as the proper transform of the linear system $\mathcal{A}$ and denote by $\mathcal{B}$ the linear system of surfaces of tridegree $(2k, 2l, 2)$ in $(\mathbb{CP}^1)^3$. By restriction to the surface $\{P = 0\}$, one obtains a map from $\mathcal{B}$ to $\tilde{\mathcal{A}}$. By definition, the kernel of this map correspond to the linear system of surfaces of tridegree $(k, l, 1)$. Then the dimension of the image of the restriction map is

$$3(2k+1)(2l+1) - 2(k+1)(l+1) - 1 = 10kl + 4(k+l),$$

and the restriction map from $\mathcal{B}$ to $\tilde{\mathcal{A}}$ is surjective. □

In summary, we obtain the following method of construction of real algebraic surfaces of degree $(2k, 2l, 2)$ in $(\mathbb{CP}^1)^3$.

1. Consider two nonsingular real algebraic curves $\{P_0 = 0\}$ and $\{P_1 = 0\}$ of bidegree (k, l) in $(\mathbb{CP}^1)^2$ intersecting transversely.

2. Consider an irreducible real algebraic curve $\{R = 0\}$ of bidegree $(4k, 4l)$ in $(\mathbb{CP}^1)^2$ with $2kl$ double points, one double point at each intersection point of $\{P_0 = 0\}$ and $\{P_1 = 0\}$.

3. Consider the polynomial $P(u_i, v_i) = v_3 P_1(u_i, v_i) + u_3 P_0(u_i, v_i)$. The real algebraic surface X in $(\mathbb{CP}^1)^3$ defined by the polynomial P is the blow-up of $(\mathbb{CP}^1)^2$ at the $2kl$ points of intersection of $\{P_0 = 0\}$ and $\{P_1 = 0\}$. Consider the strict transform $\tilde{\mathcal{C}}$ of $\{R = 0\}$ under this blow-up. By Proposition 5.3.1, there exists a polynomial Q of tridegree $(2k, 2l, 2)$ such that

$$\tilde{\mathcal{C}} = \{P = 0\} \cap \{Q = 0\}.$$

   Denote by $X_- \subset \mathbb{R}X$ the subset which projects to $\{R \leq 0\}$.

4. Consider the surface

$$Z = \{P^2 + \varepsilon Q = 0\},$$

   for $\varepsilon > 0$ small enough. Then, the surface Z is a nonsingular real algebraic surface of tridegree $(2k, 2l, 2)$ in $(\mathbb{CP}^1)^3$ and its real part $\mathbb{R}Z$ is homeomorphic to the disjoint union of two copies of X_- attached to each other by the identity map of $\mathbb{R}\tilde{\mathcal{C}}$.

5.4 A family of real algebraic surfaces of tridegree $(2k, 2l, 2)$ in $(\mathbb{CP}^1)^3$ with asymptotically maximal number of handles

Let $k \geq 2$ and $l \geq 2$. To prove Theorem 5.1.2, we construct a real algebraic curve of bidegree $(4k, 4l)$ in $(\mathbb{CP}^1)^2$ with $2kl$ double points which are the intersection points of two real algebraic curves of bidegree (k, l) in $(\mathbb{CP}^1)^2$. The main difficulty is that these $2kl$ double points have to be in a special position. In fact, there is no curve of bidegree (k, l) passing through $2kl$ points in $(\mathbb{CP}^1)^2$ in general position. In [Bru06], Brugallé

constructed a family of reducible curves $\{C_n^1 = 0\} \cup \{C_n^2 = 0\}$ in the nth Hirzebruch surface Σ_n, where $\{C_n^1 = 0\}$ has Newton polytope $Conv((0,0),(n,0),(0,1))$ and $\{C_n^2 = 0\}$ has Newton polytope $Conv((0,0),(n,0),(0,2),(n,1))$ (see also chapter 3). The chart of $\{C_n^1 = 0\} \cup \{C_n^2 = 0\}$ is depicted in Figure 5.1. Using Brusotti theorem (see Theorem

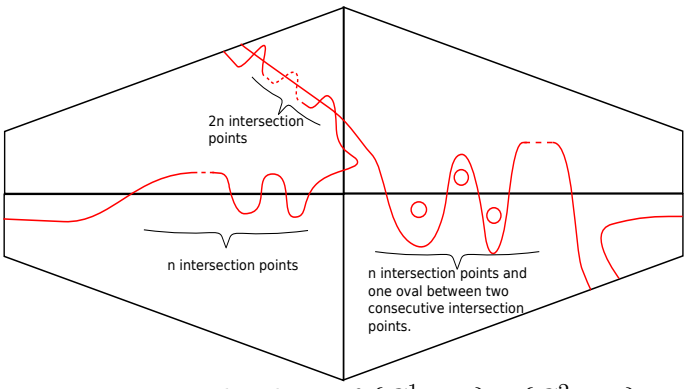

Figure 5.1 – The chart of $\{C_n^1 = 0\} \cup \{C_n^2 = 0\}$

5.6.2 or [BR90]), perturb the curve

$$\{C_{2k-1}^1 = 0\} \cup \{C_{2k-1}^2 = 0\}$$

keeping k double points, as depicted in Figure 5.2. Denote the resulting curve by

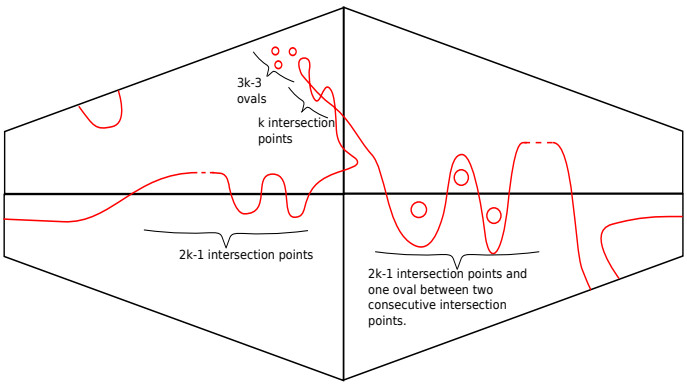

Figure 5.2 – The chart of $\{C_{2k-1} = 0\}$

$\{C_{2k-1} = 0\}$, and by $c_{i,j}$ the coefficient of the monomial (i,j) in the polynomial C_{2k-1}. Since the edge $[(0,3),(4k-2,1)]$ of the Newton polytope of C_{2k-1} is of length 2, one can assume, up to a linear change of coordinates, that $c_{0,3} = c_{4k-2,1}$. Denote by Γ the rectangle $Conv((0,0),(0,4),(4k,0),(4k,4))$ and consider the charts of the polynomials $xC_{2k-1}(x,y)$ and $x^{4k-1}y^4C_{2k-1}(\frac{1}{x},\frac{1}{y})$. Complete the rectangle Γ with other charts of polynomials, as depicted in Figure 5.3. By Shustin's patchworking theorem for curves with double points, there exists a polynomial P of Newton polytope Γ whose chart is depicted in Figure 5.3. Denote by $(x_1,y_1),\cdots,(x_{2k},y_{2k})$ the coordinates of the $2k$ double points of $\{P = 0\}$. These $2k$ double points are on the intersection of two algebraic curves of bidegree $(k,1)$ in $(\mathbb{CP}^1)^2$, but it could happen that these two curves are reducible. It turns out that to prove Theorem 5.4.2, it is important to have the $2k$ double points of $\{P = 0\}$ on the intersection of two irreducible curves of bidegree $(k,1)$ in $(\mathbb{CP}^1)^2$, which is the case if the $2k$ double points of $\{P = 0\}$ are in general position.

Lemma 5.4.1. *One can perturb the polynomial P so that the double points of $\{P = 0\}$ are in general position.*

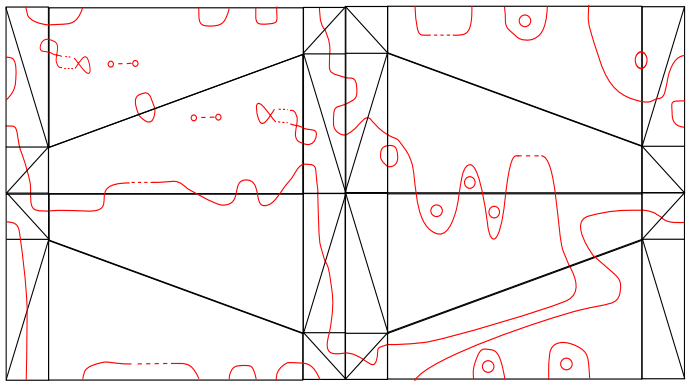

Figure 5.3 – The chart of P

Proof. Denote by $\mathcal{E}$ the set of polynomials of bidegree $(4k, 4)$, and denote by N its dimension. Denote by S the subset of $\mathcal{E}$ consisting of polynomials defining curves which have double points in a neighborhood of $\{(x_1, y_1), \cdots, (x_{2k}, y_{2k})\}$. By the Brusotti theorem (see Theorem 5.6.2 in Section 5.6), there exists a small neighborhood U of P in $\mathcal{E}$ such that $S \cap U$ is a transverse intersection of $2k$ hypersurfaces in $\mathcal{E}$. Then, $\dim(S \cap U) = N - 2k$. Define the incidence variety $\mathcal{I}$ associated to $S \cap U$ by

$$\mathcal{I} = \left\{ (Q, z_1, ..., z_{2k}) \in (S \cap U) \times ((\mathbb{C}^*)^2)^{2k} \mid z_i \text{ is a double point of } Q \right\}.$$

One has $\pi_1(\mathcal{I}) = S \cap U$, where

$$\pi_1 : \mathcal{E} \times ((\mathbb{C}^*)^2)^{2k} \to \mathcal{E}$$

denotes the first projection. Denote by π_2 the second projection:

$$\pi_2 : \mathcal{E} \times ((\mathbb{C}^*)^2)^{2k} \to ((\mathbb{C}^*)^2)^{2k}.$$

To prove the lemma, it is enough to show that $\dim(\pi_2(\mathcal{I})) = 4k$. By the Brusotti theorem, π_1 induces a local homeomorphism from $\mathcal{I}$ to $S \cap U$, so $\dim(\mathcal{I}) = \dim(S \cap U) = N - 2k$. By Lemma 5.6.4, one has

$$\dim(\pi_2^{-1}(x) \cap \mathcal{I}) = N - 6k,$$

for any $x \in \pi_2(\mathcal{I})$. So $\dim(\pi_2(\mathcal{I})) = N - 2k - (N - 6k) = 4k$. □

Hence we can assume that the double points of P are the intersection points of two irreducible curves of bidegree $(k, 1)$ in $(\mathbb{CP}^1)^2$. Denote by $L(x, y) = 0$ and $M(x, y) = 0$ the equations of two distinct irreducible curves of bidegree $(k, 1)$ in $(\mathbb{CP}^1)^2$ passing through $(x_1, y_1), \cdots, (x_{2k}, y_{2k})$, the double points of $\{P = 0\}$.
For $1 \leq h \leq l$, put

- $L_h(x, y) = y^h L(x, \frac{1}{y})$,
- $M_h(x, y) = y^h M(x, \frac{1}{y})$,

if h is odd, and

- $L_h(x, y) = y^{h-1} L(x, y)$,
- $M_h(x, y) = y^{h-1} M(x, y)$,

if h is even.

Choose an irreducible polynomial P_1 of bidegree $(4k, 2)$ such that the curve $\{P_1 = 0\}$ has a double point at all the $(x_i, \frac{1}{y_i})$. Let P_1^0 be the polynomial of bidegree $(4k, 1)$ such

that the restriction of P_1^0 to the edge $[(0,0),(4k,0)]$ coincide with the restriction of P_1 to the edge $[(0,2),(4k,2)]$ and the restriction of P_1^0 to the edge $[(0,1),(4k,1)]$ coincide with the restriction of P to the edge $[(0,0),(4k,0)]$. Put $P_1^1 = y^2 P_1^0$ (see Figure 5.4).
For $2 \leq h \leq l$, put

- $P_h(x,y) = y^{4h-1}P(x, \frac{1}{y})$, if h is odd, and

- $P_h(x,y) = y^{4h-5}P(x,y)$, if h is even.

Let P_{l+1}^0 be a polynomial of bidegree $(4k,1)$ such that the restriction of P_{l+1}^0 to the edge $[(0,0),(4k,0)]$ is equal to the restriction of P_l to the edge $[(0,4l-1),(4k,4l-1)]$. Put $P_{l+1} = y^{4l-1}P_l^0$ (see Figure 5.4).

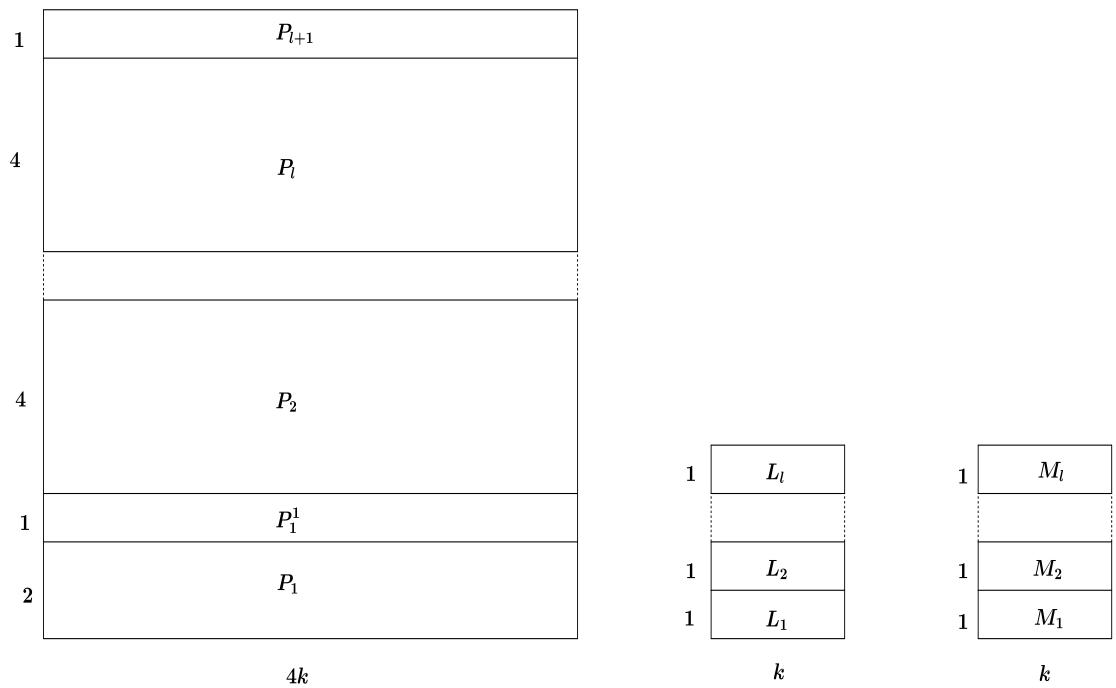

Figure 5.4 – The Newton polytopes of polynomials P_j, L_j and M_j.

Theorem 5.4.2. *There exist three real algebraic curves $\{\tilde{P} = 0\}$, $\{\tilde{L} = 0\}$ and $\{\tilde{M} = 0\}$ in $(\mathbb{CP}^1)^2$ such that:*

- *The polynomial $\tilde{P}$ is of bidegree $(4k, 4l)$, the polynomials $\tilde{L}$ and $\tilde{M}$ are of bidegree (k,l).*

- *The chart of $\tilde{P}$ is homeomorphic to the gluing of the charts of the polynomials P_1, P_1^1 and P_j, for $2 \leq j \leq l+1$.*

- *The curve $\{\tilde{P} = 0\}$ has $2kl$ double points, one double point at each intersection point of $\{\tilde{L} = 0\}$ and $\{\tilde{M} = 0\}$.*

Proof of Theorem 5.1.2. By the construction presented in Section 5.3, the three curves $\{\tilde{P} = 0\}$, $\{\tilde{L} = 0\}$ and $\{\tilde{M} = 0\}$ produce a real algebraic surface $X_{k,l}$ of tridegree $(2k, 2l, 2)$ in $(\mathbb{CP}^1)^3$. The sign of $\tilde{P}$ is the same in any empty oval of $\{\tilde{P} = 0\}$ coming from the gluing of the charts of the polynomials P_h, for $2 \leq h \leq l$. Assume that this sign is positive. Denote by Y_+ (resp., Y_-) the subset of $\mathbb{R}Y$ which projects to $\{\tilde{P} \geq 0\}$ (resp.,

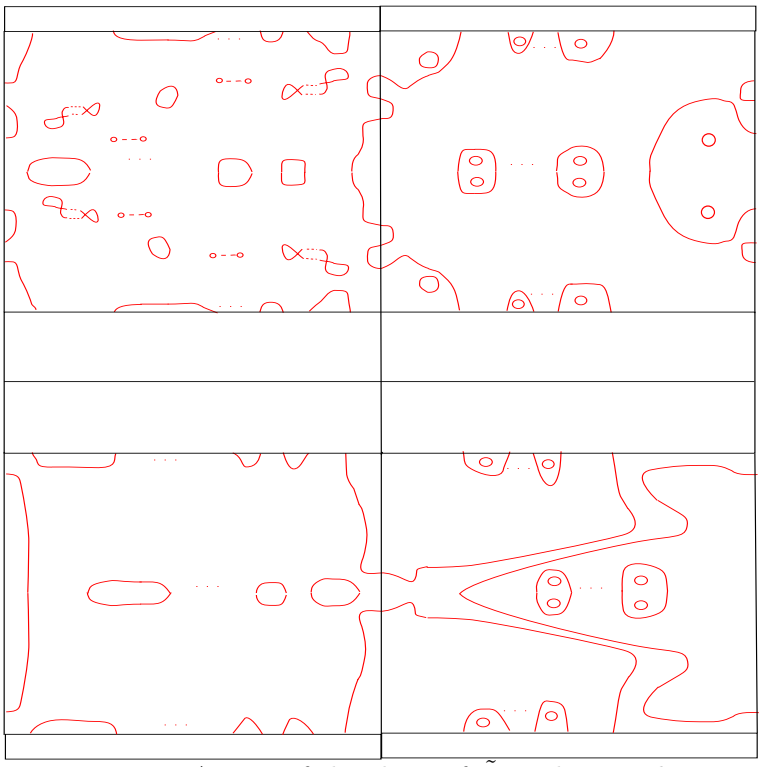

Figure 5.5 – A part of the chart of $\tilde{P}$ in the case $l = 3$.

$\{\tilde{P} \leq 0\}$), where Y is $(\mathbb{CP}^1)^2$ blown up at the $2kl$ double points of $\{\tilde{P} = 0\}$. Then, $\mathbb{R}X_{k,l}$ is homeomorphic to the disjoint union of two copies of Y_- attached by the identity map of the strict transform of $\{\tilde{P} = 0\}$. We depicted a part of the chart of $\tilde{P}$ in the case $l = 3$ in Figure 5.5. By counting all the ovals of $\{\tilde{P} = 0\}$ containing two empty ovals, one sees that

$$b_0(Y_-) \geq (2k-2)(l-2).$$

Let us estimate from below the Euler characteristic of Y_+. By counting empty ovals of $\{\tilde{P} = 0\}$, one sees that Y_+ contains at least $(6k-4)(l-1) + 3(2k-2)(l-2)$ components homeomorphic to a disc. One sees also that Y_+ contains at least $l-2$ components homeomorphic to a disc with $k-1$ holes, and another component with at least $(k-1)(l-2)$ holes. Since the real part of the real algebraic curve curve $\{\tilde{P} = 0\}$ contains at most $(4k-1)(4l-1) + 1 - 2kl$ connected components, one sees that there exist $c_0, d_0, e_0 \in \mathbb{Z}$ such that

$$\chi(Y_+) \geq 10kl + c_0 \cdot 2k + d_0 \cdot 2l + e_0.$$

Thus, one has

$$b_0(\mathbb{R}X_{k,l}) = b_0(Y_-) \geq 2kl - 4k - 2l,$$

and

$$\begin{array}{rcl} \chi(\mathbb{R}X_{k,l}) & = & 2\chi(Y_-) \\ & = & 2(\chi(\mathbb{R}Y) - \chi(Y_+)) \\ & \leq & 2(-2kl - 10kl + c_0 \cdot 2k + d_0 \cdot 2l + e_0) \\ & \leq & -24kl + 2c_0 \cdot 2k + 2d_0 \cdot 2l + 2e_0. \end{array}$$

Therefore, one obtains

$$\begin{array}{rcl} b_1(\mathbb{R}X_{k,l}) & = & 2b_0(\mathbb{R}X_{k,l}) - \chi(\mathbb{R}X_{k,l}) \\ & \geq & 28kl - c \cdot 2k - d \cdot 2l + e, \end{array}$$

where $c, d, e \in \mathbb{Z}$, which proves Theorem 5.1.2. □

Proof of Theorem 5.4.2. The construction follows the same lines as the proof of the main theorem in [Shu98]. We recall the main steps referring at [Shu98] for the proofs of auxiliary statements. Denote by Δ the rectangle $Conv\,((0,0),(4k,0),(0,4l),(4k,4l))$, denote by Δ_1 the Newton polytope of P_1, denote by Δ_1^1 the Newton polytope of P_1^1 and denote by Δ_h the Newton polytope of P_h, for $2 \leq h \leq l+1$. Denote by Λ the rectangle $Conv\,((0,0),(k,0),(0,l),(k,l))$ and denote by Λ_h the Newton polytope of L_h, for $1 \leq h \leq l$. Denote by $a_{i,j}$, for all $(i,j) \in \Delta$, the collection of real numbers satisfying

$$P_1^1 = \sum_{i,j \in \Delta_1^1} a_{i,j} x^i y^j,$$
$$P_h = \sum_{i,j \in \Delta_h} a_{i,j} x^i y^j,$$

for $1 \leq h \leq l+1$. Denote by $b_{i,j}$, for all $(i,j) \in \Gamma$ and by $c_{i,j}$, for all $(i,j) \in \Gamma$, the collections of real numbers satisfying

$$L_h = \sum_{i,j \in \Lambda_h} b_{i,j} x^i y^j,$$
$$M_h = \sum_{i,j \in \Lambda_h} c_{i,j} x^i y^j,$$

for $2 \leq h \leq l+1$. We look for the desired polynomials in a one-parametric family of polynomials.

$$P_t = \sum_{i,j \in \Delta} A_{i,j}(t) x^i y^j t^{\nu_P(i,j)}, \tag{5.1}$$
$$L_t = \sum_{i,j \in \Lambda} B_{i,j}(t) x^i y^j t^{\nu_L(i,j)}, \tag{5.2}$$
$$M_t = \sum_{i,j \in \Lambda} C_{i,j}(t) x^i y^j t^{\nu_M(i,j)}, \tag{5.3}$$

where

- $|A_{i,j}(t) - a_{i,j}| \leq Kt$,
- $|B_{i,j}(t) - b_{i,j}| \leq Kt$, and
- $|C_{i,j}(t) - c_{i,j}| \leq Kt$,

for some positive constant K. The piecewise-linear functions ν_P, ν_L and ν_M are defined as follows. The function ν_L is the piecewise-linear function independent of i certifying the convexity of the decomposition $\Lambda = \cup_h \Lambda_h$, satisfying $\nu_L(0,1) = 0$, of slope -1 on Λ_1 and of slope h on Λ_{h+1}, for $1 \leq h \leq l-1$. Put $\nu_M = \nu_L$. The function ν_P is the piecewise-linear function independent of i certifying the convexity of the decomposition $\Delta = \cup_h \Delta_h$, satisfying $\nu_P(0,2) = 0$, of slope -1 on Δ_1, of slope 0 on Δ_1^1 and of slope h on Δ_{h+1}, for $1 \leq h \leq l$.

Denote by $\mu_L^h(j) = a_h + hj$ the affine function equal to ν_L on Λ_h, $h = 1, \cdots, l$. Denote by $\mu_P^h(j) = a'_h + hj$ the affine function equal to ν_P on Δ_h, $h = 1, \cdots, l$. The substitution of $\nu_P^h = \nu_P - \mu_P^h$ for ν_P in (5.1), the substitution of $\nu_L^h = \nu_L - \mu_L^h$ for ν_L in (5.2) and the substitution of $\nu_M^h = \nu_M - \mu_M^h$ for ν_M in (5.3) give the families

$$P_{h,t} = P_h + \sum_{(i,j) \notin \Delta_h} A_{i,j}(t) x^i y^j t^{\nu_P^h(j)} + \sum_{(i,j) \in \Delta_h} (A_{i,j}(t) - a_{i,j}) x^i y^j,$$

$$L_{h,t} = L_h + \sum_{(i,j)\notin\Lambda_h} B_{i,j}(t)x^i y^j t^{\nu_L^h(j)} + \sum_{(i,j)\in\Lambda_h} (B_{i,j}(t) - b_{i,j})x^i y^j,$$

$$M_{h,t} = M_h + \sum_{(i,j)\notin\Lambda_h} C_{i,j}(t)x^i y^j t^{\nu_M^h(j)} + \sum_{(i,j)\in\Lambda_h} (C_{i,j}(t) - c_{i,j})x^i y^j,$$

for all $h = 1, \cdots, l$. These substitutions are the composition of the coordinate change

$$T_h(x, y) = (x, yt^h)$$

with the multiplication of the polynomial by some positive number.

$$P_{h,t} = t^{-a'_h} P_t(T_h^{-1}(x, y)),$$

$$L_{h,t} = t^{-a_h} L_t(T_h^{-1}(x, y)),$$

$$M_{h,t} = t^{-a_h} M_t(T_h^{-1}(x, y)).$$

In particular, the point (x, y) is a singular point of P_t in $(\mathbb{C}^*)^2$ if and only if the point $T_h(x, y)$ is a singular point of $P_{h,t}$.
Fix a compact $Q \subset (\mathbb{C}^*)^2$, whose interior contains all singular points of P_h in $(\mathbb{C}^*)^2$, for $h = 1, ..., l$. Denote by z_{h_p}, for $p \in I_h$, the singular points of $P_{h,t}$ in Q.

Lemma 5.4.3. (*see [Shu98]*) *There exists $t_0 > 0$ such that for any $t \in (0, t_0)$, the points $T_h(z_{h_p})$ for $p \in I_h$ and $h = 1, ..., l$, are the only singular points of P_t in $(\mathbb{C}^*)^2$.*

We define $A_{i,j}$, $B_{i,j}$ and $C_{i,j}$ as smooth functions of t such that $A_{i,j}(0) = a_{i,j}$, $B_{i,j}(0) = b_{i,j}$ and $C_{i,j}(0) = c_{i,j}$ and such that for any $h \in \{1, ..., l\}$, the polynomial $P_{h,t}$ has $2k$ double points in Q which lie on the intersection of the curves $\{L_{h,t} = 0\}$ and $\{M_{h,t} = 0\}$. Following the notations of Section 5.6, consider in $\mathcal{P}(\Delta_h) \times \mathcal{P}(\Lambda_h) \times \mathcal{P}(\Lambda_h)$ the germ S_h at (P_h, L_h, M_h) of the variety of polynomials (P, L, M) such that P has its singular points in a neighboorhood of the double points of P_h and such that L and M vanish at these singular points. Define $\partial\Delta_+^h$ and $\partial\Lambda_+^h$ as follows:

- $\partial\Delta_+^1 = \emptyset$ and $\partial\Lambda_+^1 = \emptyset$,

- for $2 \le h \le l$, $\partial\Delta_+^h = [(0, 4h-5) - (4k, 4h-5)]$ and $\partial\Lambda_+^h = [(0, h-1) - (k, h-1)]$.

One has $\#(\partial\Delta_+^h \cap \mathbb{Z}^2) - 1 = 4k$ and $\#(\partial\Lambda_+^h \cap \mathbb{Z}^2) - 1 = k$, and it follows from Theorem 5.6.7 applied to (P_h, L_h, M_h) that S_h is the transversal intersection of smooth hypersurfaces

$$\left\{\varphi_r^{(h)} = 0\right\}, \quad r = 1, ..., d_h, \tag{5.4}$$

$$d_h = \mathrm{codim} S_h,$$

where

$$\begin{array}{rccc} \varphi_r^{(h)}: & \mathcal{P}(\Delta) \times \mathcal{P}(\Lambda) \times \mathcal{P}(\Lambda) & \longrightarrow & \mathbb{C} \\ & \left(A'_{i,j}, B'_{u,v}, C'_{u,v}\right) & \longmapsto & \varphi_r^{(h)}\left(A'_{i,j}, B'_{u,v}, C'_{u,v}\right). \end{array}$$

Moreover, there is a subset

$$\Xi_h \subset (\mathbb{Z}^2)^3 \cap (\Delta_h \setminus \partial\Delta_+^h \times (\Lambda_h \setminus \partial\Lambda_+^h)^2),$$

such that $\mathrm{card}(\Xi_h) = d_h$, and

$$\det\left(\frac{\partial\varphi_r^{(h)}}{\partial A'_{i,j}, \partial B'_{u,v}, \partial C'_{u',v'}}\right)_{\substack{r = 1, ..., d_h; \\ \{(i,j),(u,v),(u',v')\} \in \Xi_h}} \neq 0$$

at the point

$$(A'_{i,j}, B'_{u,v}, C'_{u',v'}) = \begin{cases} (a_{i,j}, b_{u,v}, c_{u',v'}) & , \{(i,j),(u,v),(u',v')\} \in \Xi_h \\ 0 & , \text{ otherwise} \end{cases}$$

To find out $A_{i,j}(t), B_{u,v}(t)$ and $C_{u',v'}(t)$ we plug

$$A'_{i,j} = A_{i,j} t^{\nu_P^h(j)},\ B'_{u,v} = B_{u,v} t^{\nu_L^h(v)} \text{ and } C'_{u',v'} = C_{u',v'} t^{\nu_M^h(v')}.$$

in (5.4) for any $h = 1, ..., l$.

Lemma 5.4.4. *One has*

$$\det \left(\frac{\partial \varphi_r^{(h)}}{\partial A_{i,j}, \partial B_{u,v}, \partial C_{u',v'}} \right)_{\substack{r = 1, \dots, d_h; \\ \{(i,j),(u,v),(u',v')\} \in \bigcup_h \Xi_h}} \neq 0$$

By means of the implicit function theorem, we derive the existence of the desired functions $A_{i,j}(t), B_{i,j}(t)$ and $C_{i,j}(t)$. □

Proof of Lemma 5.4.4. The sets Ξ_h are disjoint by construction and the matrix

$$\left(\frac{\partial \varphi_r^{(h)}}{\partial A_{i,j}, \partial B_{u,v}, \partial C_{u',v'}} \right)_{\substack{r = 1, \dots, d_h; \\ \{(i,j),(u,v),(u',v')\} \in \bigcup_h \Xi_h}}$$

takes a block-triangular form as $t = 0$ with the nondegenerated blocks

$$\left(\frac{\partial \varphi_r^{(h)}}{\partial A'_{i,j}, \partial B'_{u,v}, \partial C'_{u',v'}} \right)_{\substack{r = 1, \dots, d_h; \\ \{(i,j),(u,v),(u',v')\} \in \Xi_h}},$$

$h = 1, ..., l$, on the diagonal. □

5.5 Counterexample to Viro's conjecture in tridegree $(4,4,2)$

To prove Theorem 5.1.1, we present a construction of a curve of bidegree $(8,8)$ with 4 double points lying on the intersection of two curves of bidegree $(2,2)$. Consider the curve $\{C_3^1 = 0\} \cup \{C_3^2 = 0\}$ with Newton polytope $Conv\left((0,0),(6,0),(0,3),(6,1)\right)$ (see Section 5.4). Perturb the curve $\{C_3^1 = 0\} \cup \{C_3^2 = 0\}$ keeping 4 double points, as depicted in Figure 5.6. Complete the rectangle $Conv\left((0,0),(8,0),(0,3),(8,3)\right)$ with other charts of polynomials, as depicted in Figure 5.6. By Shustin's patchworking theorem for curves with double points, there exists a polynomial P of bidegree $(8,8)$ whose chart is depicted in Figure 5.6. As in Lemma 5.4.1, one can assume that the four double points of the curve $\{P = 0\}$ are the intersection points of two distinct irreducible nonsingular curves of bidegree $(2,2)$. Denote by $L(x,y)$ and $M(x,y)$ the polynomials defining the two curves of bidegree $(2,2)$ passing through the four double points of $\{P = 0\}$. Put

- $P_1(x,y) = y^3 P(x, \frac{1}{y})$,
- $P_2(x,y) = y^3 P(x,y)$,
- $L_1(x,y) = yL(x, \frac{1}{y})$,
- $L_2(x,y) = yL(x,y)$,

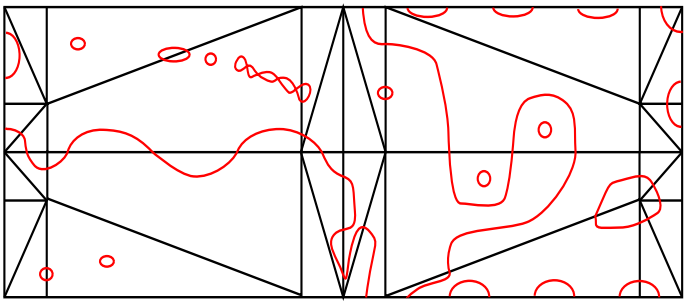

Figure 5.6 – The chart of P

- $M_1(x,y) = yM(x, \frac{1}{y})$,
- $M_2(x,y) = yM(x,y)$.

Consider a Harnack curve $\left\{P_3^0(x,y) = 0\right\}$ of bidegree $(8,2)$ in $(\mathbb{RP}^1)^2$ (see [Mik00] for the definition of a Harnack curve). The chart of P_3^0 is depicted in Figure 5.7. Since $\left\{P_3^0(x,y) = 0\right\}$ is a Harnack curve, one can assume that the restriction of P_3^0 to the edge $[(0,0),(8,0)]$ is equal to the restriction of P to the edge $[(0,3),(8,3)]$ (see for example [KO06]). Put $P_3 = y^6 P_3^0$.

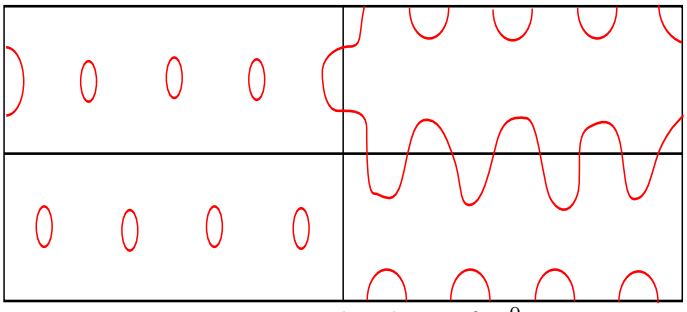

Figure 5.7 – The chart of P_3^0

Theorem 5.5.1. *There exist three real algebraic curves $\{\tilde{P} = 0\}$, $\{\tilde{L} = 0\}$ and $\{\tilde{M} = 0\}$ in $(\mathbb{CP}^1)^2$ such that:*

- *The polynomial $\tilde{P}$ is of bidegree $(8,8)$.*
- *The polynomials $\tilde{L}$ and $\tilde{M}$ are of bidegree $(2,2)$.*
- *The chart of $\tilde{P}$ is the result of the gluing of the charts of P_1, P_2 and P_3.*
- *The 8 double points of $\left(\tilde{P} = 0\right)$ are on the intersection of the two curves $\left(\tilde{L} = 0\right)$ and $\left(\tilde{M} = 0\right)$.*

Proof. The proof follows the same lines as the proof of Theorem 5.4.2. □

The chart of $\tilde{P}$ is depicted in Figure 5.8. Denote by $\tilde{C}$ the strict transform of $\{\tilde{P} = 0\}$ under the blow up of $(\mathbb{CP}^1)^2$ at the 8 double points of $\{\tilde{P} = 0\}$. Assume that the sign of $\tilde{P}$ in any empty oval is positive and consider the real algebraic surface Z of tridegree $(4,4,2)$ in $(\mathbb{CP}^1)^3$ defined by

$$Z = \{F^2 + \varepsilon G = 0\},$$

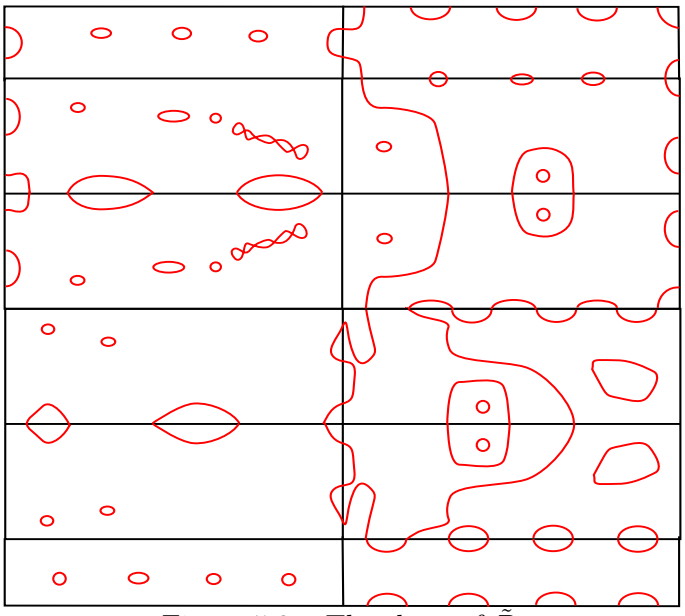

Figure 5.8 – The chart of $\tilde{P}$

where $F = v_3\tilde{L} + u_3\tilde{M}$, the number ε is some small positive parameter and G is a polynomial of tridegree $(4, 4, 2)$ such that

$$\tilde{C} = \{F = 0\} \cap \{G = 0\}.$$

It follows from Section 5.3 that $\mathbb{R}Z$ is homeomorphic to the disjoint union of two copies of Y_- attached to each other by the identity map of $\tilde{C}$, where Y_- is the part of $(\mathbb{RP}^1)^2$ blown up at the 8 double points of $\{\tilde{P} = 0\}$ projecting to $\{\tilde{P} \leq 0\}$. One can see from Figure 5.8 that $b_0(\mathbb{R}Z) = 6$ and that $\mathbb{R}Z$ contains three spheres and two components of genus two. Moreover, one has

$$\begin{aligned} \chi(\mathbb{R}Z) &= 2(-8 - (34 - 4)) \\ &= -76. \end{aligned}$$

Then $b_1(\mathbb{R}Z) = 88$ and

$$\mathbb{R}Z \simeq 2S_2 \sqcup 3S \sqcup S_{40},$$

which proves Theorem 5.1.1.

5.6 Transversality theorems

In this section, we prove a transversality theorem needed in the proof of Theorem 5.4.2 and Theorem 5.5.1.

5.6.1 Notations

- For a polytope Δ, denote by $|\mathcal{L}_\Delta|$ the linear system on $Tor(\Delta)$ of curves of Newton polytope Δ.

- Let $F \in \mathcal{P}(\Delta)$, and let $\partial\Delta_+ \subset \partial\Delta$ be a subset of the set of edges of Δ. Introduce the space of polynomials

$$\mathcal{P}(\Delta, \partial\Delta_+, F) = \{G \in \mathcal{P}(\Delta) \mid G^\sigma = F^\sigma, \sigma \in \partial\Delta_+\}.$$

- For a polytope Δ, denote by $A(\Delta)$ the euclidean area of Δ, by $b(\Delta)$ the number of integral points of the boundary of Δ, by $i(\Delta)$ the number of integral points in the interior of Δ and put $|\Delta| = i(\Delta) + b(\Delta)$ the number of integral points in Δ.

5.6.2 Brusotti theorem

Let Δ be a polytope. Denote by $t = (x, y)$ the coordinates on $(\mathbb{C}^*)^2$. In $\mathcal{P}(\Delta) \times (\mathbb{C}^*)^2$, consider the algebraic variety defined by

$$B = \begin{cases} P(t) &= 0, \\ \partial P/\partial x(t) &= 0, \\ \partial P/\partial y(t) &= 0. \end{cases}$$

Let $(P_0, t_0) \in B$, and assume that $t_0 = (x_0, y_0) \in (\mathbb{C}^*)^2$ is an ordinary quadratic point of $\{P_0 = 0\}$.

Lemma 5.6.1. (*see, for example, [BR90]*)
There exists a neighborhood U of (P_0, t_0) in $\mathcal{P}(\Delta) \times (\mathbb{C}^*)^2$ such that:

- *$B \cap U$ is smooth of codimension 1.*
- *If $\pi : \mathcal{P}(\Delta) \times (\mathbb{C}^*)^2 \to \mathcal{P}(\Delta)$ denotes the first projection, then $B' = \pi(B \cap U)$ is smooth of codimension 1.*

Assume now that the curve $\{P_0 = 0\}$ has N non-degenerated double points t_h, $h = 1, ..., N$ and no other singular points. Applying the above lemma to each t_h, we obtain N non-singular analytic submanifolds of $\mathcal{P}(\Delta)$, say $B'_1, ..., B'_N$ passing through P_0.

Theorem 5.6.2. (*Brusotti, see, for example, [BR90]*)
There exists a neighborhood U' of P_0 in $\mathcal{P}(\Delta)$ such that the intersection

$$B'_1 \cap \cdots \cap B'_N \cap U'$$

is transversal in $\mathcal{P}(\Delta)$.

The key point of the proof of Brusotti theorem is the following corollary of Riemann-Roch theorem.

Lemma 5.6.3. (*see, for example, [BR90]*)
Let Δ be a polytope and let $C \in |\mathcal{L}_\Delta|$. Suppose that C has k non-degenerated double points $x_1, ..., x_k$ in $(\mathbb{C}^*)^2$ and no other singular points. Then, the linear subsystem of $|\mathcal{L}_\Delta|$ consisting of curves passing through $x_1, ...x_k$ is of codimension k.

5.6.3 Linear system of curves with prescribed quadratic points

Let Δ be a polytope and let $C \in |\mathcal{L}_\Delta|$. Suppose that C is irreducible with k ordinary quadratic points $x_1, ..., x_k$ in $(\mathbb{C}^*)^2$ and no other singular points. Fix also m marked points $p_1, ...p_m$ on $C \setminus \{x_1, ..., x_k\}$.

Lemma 5.6.4. *Suppose that*

$$2k + m < b(\Delta).$$

Then, the sublinear system of $|\mathcal{L}_\Delta|$ consisting of curves having singularities at $x_1, ..., x_k$ and passing through $p_1, ..., p_m$ is of codimension $3k + m$.

Proof. One has the following exact sheaf sequence:

$$0 \to \mathcal{O}_{Tor(\Delta)} \to \mathcal{O}_{Tor(\Delta)}(C) \to \mathcal{O}_C(C) \to 0,$$

where $\mathcal{O}_{Tor(\Delta)}$ is the sheaf of holomorphic functions on $Tor(\Delta)$, the sheaf $\mathcal{O}_{Tor(\Delta)}(C)$ is the invertible sheaf associated to the divisor C, and $\mathcal{O}_C(C)$ denotes the restriction of $\mathcal{O}_{Tor(\Delta)}(C)$ to C. As $H^1(Tor(\Delta), \mathcal{O}_{Tor(\Delta)}) = 0$, the long exact sequence in cohomology associated to the above exact sequence splits. The first part of the long exact sequence is the following:

$$0 \to \mathbb{C} \to H^0(Tor(\Delta), \mathcal{O}_{Tor(\Delta)}(C)) \xrightarrow{r} H^0(C, \mathcal{O}_C(C)) \to 0.$$

Denote by $E(x_1, ..., x_k, p_1, ..., p_m)$ the subspace of $H^0(Tor(\Delta), \mathcal{O}_{Tor(\Delta)}(C))$ consisting of sections vanishing at least at order 2 at $x_1, ..., x_k$ and passing through $p_1, ..., p_m$. Put $F = r(E(x_1, ..., x_k, p_1, ..., p_m))$. One has the following exact sequence:

$$0 \to \mathbb{C} \to E(x_1, ..., x_k, p_1, ..., p_m) \xrightarrow{r} F \to 0.$$

Fix a generic section $s \in E(x_1, ..., x_k, p_1, ..., p_m)$ with divisor D. Then, $D \cap C$ consists of a finite number of points (C is irreducible), and it defines a divisor on C and also on $\tilde{C}$, the normalization of C. Denote by $(\tilde{x_i}, \tilde{x_i}')$ the inverse images of x_i by the normalization map. Denote by $\tilde{p_i}$ the inverse image of p_i by the normalization map. Define on $\tilde{C}$ the divisor

$$D' := D \cap C - E,$$

where

$$E = \left\{ 2\sum_{i=1}^{k} (\tilde{x_i} + \tilde{x_i}') + \sum_{i=1}^{m} \tilde{p_i} \right\}.$$

By definition of r, the set F is the subspace of $H^0(C, \mathcal{O}_C(C \cap D))$ of sections vanishing at least at order 2 at the points $x_1, ..., x_k$ and at least at order 1 at the points $p_1, ..., p_m$. Considering the normalization map, one gets the following injective map:

$$0 \to H^0(C, \mathcal{O}_C(D \cap C)) \xrightarrow{\iota} H^0(\tilde{C}, \mathcal{O}_{\tilde{C}}(D \cap C)).$$

Thus, $\dim(F) \leq \dim(\iota(F))$. The linear system $\iota(F)$ is the linear system of sections of $\mathcal{O}_{\tilde{C}}(D \cap C)$ vanishing at least at order 2 at the points $(\tilde{x_i}, \tilde{x_i}')$ and at least at order 1 at the points p_i'. Consider the following exact sheaf sequence:

$$0 \to \mathcal{O}_{\tilde{C}}(D') \xrightarrow{\otimes s} \mathcal{O}_{\tilde{C}}(D \cap C) \xrightarrow{r} \mathcal{O}_E(D \cap C \mid_E) \to 0,$$

where r is the restriction map. Passing to the associated long exact sequence, one sees that $\iota(F)$ is identified with $H^0(\tilde{C}, D')$. Let us compute $h^0(\tilde{C}, D')$. The divisor D' is of degree $A(2\Delta) - 2A(\Delta) - 4k - m$. Then, one has

$$\begin{aligned} \deg(K_{\tilde{C}} - D') &= -\deg(D') - 2 + 2g(\tilde{C}) \\ &= -A(2\Delta) + 2A(\Delta) + 4k + m - 2 + 2(i(\Delta) - k) \\ &= 2k + m - b(\Delta). \end{aligned}$$

By hypothesis, $2k + m - b(\Delta) < 0$. So $h^0(\tilde{C}, K_{\tilde{C}} - D') = 0$, and by Riemann-Roch formula, one has

$$\begin{aligned} h^0(\tilde{C}, D') &= \deg(D') + 1 - g(\tilde{C}) \\ &= A(2\Delta) - 2A(\Delta) - 4k - m + 1 - (i(\Delta) - k) \\ &= i(\Delta) + b(\Delta) - 1 - 3k - m \\ &= \dim(\mathcal{L}(\Delta)) - 3k - m. \end{aligned}$$

So one gets

$$\dim(F) \leq \dim(\mathcal{L}(\Delta)) - 3k - m.$$

On the other hand

$$\dim(F) = \dim(\mathbb{P}(E(x_1, ..., x_k, p_1, ..., p_m))),$$

and

$$\dim(\mathbb{P}(E(x_1, ..., x_k, p_1, ..., p_m))) \geq \dim(\mathcal{L}(\Delta)) - 3k - m.$$

So finally

$$\dim(\mathbb{P}(E(x_1, ..., x_k, p_1, ..., p_m))) = \dim(\mathcal{L}(\Delta)) - 3k - m.$$

□

5.6.4 A transversality theorem

Fix three polytopes Δ, Δ' and Δ''. In $\mathcal{P}(\Delta) \times (\mathbb{C}^*)^2 \times \mathcal{P}(\Delta') \times \mathcal{P}(\Delta'')$, consider the algebraic variety defined by

$$S = \begin{cases} P(t) &= 0, \\ \partial P/\partial x(t) &= 0, \\ \partial P/\partial y(t) &= 0, \\ Q(t) &= 0, \\ R(t) &= 0. \end{cases}$$

Let $(P_0, Q_0, R_0) \in \mathcal{P}(\Delta) \times \mathcal{P}(\Delta') \times \mathcal{P}(\Delta'')$, and assume that $t_0 = (x_0, y_0)$ is an ordinary quadratic point of $\{P_0 = 0\}$ such that $\{Q_0 = 0\}$ intersects $\{R_0 = 0\}$ transversely at t_0. Then, in particular, $(P_0, t_0, Q_0, R_0) \in S$.

Lemma 5.6.5. *There exists a neighborhood U of (P_0, t_0, Q_0, R_0) in $\mathcal{P}(\Delta) \times (\mathbb{C}^*)^2 \times \mathcal{P}(\Delta') \times \mathcal{P}(\Delta'')$ such that:*

- *$S \cap U$ is smooth of codimension 5.*
- *If*

$$\pi : \mathcal{P}(\Delta) \times (\mathbb{C}^*)^2 \times \mathcal{P}(\Delta') \times \mathcal{P}(\Delta'') \longrightarrow \mathcal{P}(\Delta) \times \mathcal{P}(\Delta') \times \mathcal{P}(\Delta'')$$

is the projection forgetting the second factor, then $S' = \pi(S \cap U)$ is smooth of codimension 3. Moreover, the tangent space to S' at $\pi(P_0, t_0, Q_0, R_0)$ is given by the equations

$$\begin{cases} \sum A_{i,j} x_0^i y_0^j &= 0, \\ -\begin{pmatrix} d_{t_0} Q_0 \\ d_{t_0} Q_0 \end{pmatrix} (Hess_{t_0} P_0)^{-1} \begin{pmatrix} \sum i A_{i,j} x_0^{i-1} y_0^j \\ \sum j A_{i,j} x_0^i y_0^{j-1} \end{pmatrix} + \begin{pmatrix} \sum B_{k,l} x_0^k y_0^l \\ \sum C_{m,n} x_0^m y_0^n \end{pmatrix} &= 0, \end{cases}$$

where $(A_{i,j})_{i,j \in \Delta}$ are coordinates in the tangent space of $\mathcal{P}(\Delta)$, the coordinates $((B_{k,l})_{k,l \in \Delta'}$ are coordinates in the tangent space of $\mathcal{P}(\Delta')$, and $(C_{m,n})_{m,n \in \Delta''}$ are coordinates in the tangent space of $\mathcal{P}(\Delta'')$.

Proof. The first point follows from the implicit function theorem. Introduce the map

$$F = (F_1, F_2, F_3, F_4, F_5) : \mathcal{P}(\Delta) \times (\mathbb{C}^*)^2 \times \mathcal{P}(\Delta') \times \mathcal{P}(\Delta'') \longrightarrow \mathbb{C}^5,$$

with

- $F_1(P, t, Q, R) = P(t)$,
- $F_2(P, t, Q, R) = \partial P/\partial x(t)$,

- $F_3(P,t,Q,R) = \partial P/\partial y(t)$,
- $F_4(P,t,Q,R) = Q(t)$,
- $F_5(P,t,Q,R) = R(t)$.

Denote by $J_F(P_0,t_0,Q_0,R_0)$ the Jacobian matrix of F at (P_0,t_0,Q_0,R_0). By an easy computation, one has

$$J_F(P_0,t_0,Q_0,R_0) = \begin{pmatrix} x_0^i y_0^j & 0 & 0 & 0 & 0 \\ ix_0^{i-1}y_0^j & & & 0 & 0 \\ jx_0^i y_0^{j-1} & & Hess_{t_0}P_0 & 0 & 0 \\ 0 & & d_{t_0}Q_0 & x_0^k y_0^l & 0 \\ 0 & & d_{t_0}R_0 & 0 & x_0^m y_0^n \end{pmatrix}_{[5,|\Delta|+2+|\Delta'|+|\Delta''|]}.$$

As t_0 is an ordinary quadratic point of P_0, the matrix $Hess_{t_0}P_0$ is invertible. It follows that $J_F(P_0,t_0,Q_0,R_0)$ is of rank 5. In fact, the submatrix of $J_F(P_0,t_0,Q_0,R_0)$, where $i=j=0$, $k=l=0$ and $m=n=0$, is as follows:

$$\begin{pmatrix} 1 & 0 & 0 & 0 & 0 \\ 0 & & & 0 & 0 \\ 0 & & Hess_{t_0}P_0 & 0 & 0 \\ 0 & & d_{t_0}Q_0 & 1 & 0 \\ 0 & & d_{t_0}R_0 & 0 & 1 \end{pmatrix}.$$

This last matrix is invertible. For the second point, since $Hess_{t_0}P_0$ is invertible, use the second and the third equations of the tangent space to S at (P_0,t_0,Q_0,R_0) to write t as a function of P over a small neighborhood of (P_0,Q_0,R_0) in $\mathcal{P}(\Delta)\times\mathcal{P}(\Delta')\times\mathcal{P}(\Delta'')$. This proves the lemma. □

Assume now that the curve $\{P_0=0\}$ is irreducible and has N non-degenerated double points t_h, $h=1,...,N$ such that $\{Q_0=0\}$ intersects $\{R_0=0\}$ transversely at each t_h. Assume also that $\{P_0=0\}$ has no further singular points. Applying the above lemma to each t_h, we obtain N nonsingular analytic manifolds of $\mathcal{P}(\Delta)\times\mathcal{P}(\Delta')\times\mathcal{P}(\Delta'')$ passing through (P_0,Q_0,R_0). Denote these N nonsingular analytic manifolds by $S'_1,\cdots,S'_N$,

Theorem 5.6.6. *If $2N < b(\Delta)$, then there exists a neighborhood W of (P_0,Q_0,R_0) in $\mathcal{P}(\Delta)\times\mathcal{P}(\Delta')\times\mathcal{P}(\Delta'')$ such that the intersection*

$$S'_1\cap\cdots\cap S'_N\cap W$$

is transversal in $\mathcal{P}(\Delta)\times\mathcal{P}(\Delta')\times\mathcal{P}(\Delta'')$.

Proof. By the implicit function theorem, it is sufficient to show that the tangent spaces to the manifolds S'_h at (P_0,Q_0,R_0) intersect transversely. This is equivalent to the fact that the matrix

$$M = \begin{pmatrix} x_1^i y_1^j & 0 & 0 \\ \begin{pmatrix} d_{t_1}Q_0 \\ d_{t_1}R_0 \end{pmatrix}(Hess_{t_1}P_0)^{-1}\begin{pmatrix} ix_1^{i-1}y_1^j \\ jx_1^i y_1^{j-1}\end{pmatrix} & \begin{pmatrix} x_1^k y_1^l \\ 0 \end{pmatrix} & \begin{pmatrix} 0 \\ x_1^m y_1^n \end{pmatrix} \\ \vdots & \vdots & \vdots \\ \vdots & \vdots & \vdots \\ x_N^i y_N^j & 0 & 0 \\ \begin{pmatrix} d_{t_N}Q_0 \\ d_{t_N}R_0 \end{pmatrix}(Hess_{t_N}P_0)^{-1}\begin{pmatrix} ix_N^{i-1}y_N^j \\ jx_N^i y_N^{j-1}\end{pmatrix} & \begin{pmatrix} x_N^k y_N^l \\ 0 \end{pmatrix} & \begin{pmatrix} 0 \\ x_N^m y_N^n \end{pmatrix} \end{pmatrix}_{[3N,|\Delta|+|\Delta'|+|\Delta''|]}$$

is of rank $3N$. As $\{Q_0 = 0\}$ and $\{R_0 = 0\}$ intersect transversely at each t_h, the matrices

$$\begin{pmatrix} d_{t_1} Q_0 \\ d_{t_1} R_0 \end{pmatrix}, \cdots, \begin{pmatrix} d_{t_N} Q_0 \\ d_{t_N} R_0 \end{pmatrix}$$

are invertible. Consider the following matrix:

$$N = \begin{pmatrix} 1 & 0 & 0 & 0 & \cdots & 0 & 0 & 0 \\ 0 & & & 0 & \cdots & 0 & 0 & 0 \\ 0 & & (Hess_{t_1} P_0) \begin{pmatrix} d_{t_1} Q_0 \\ d_{t_1} R_0 \end{pmatrix}^{-1} & 0 & \cdots & 0 & 0 & 0 \\ \vdots & & \vdots & \ddots & \cdots & \vdots & \vdots & \\ 0 & 0 & 0 & 0 & \cdots & 1 & 0 & 0 \\ 0 & 0 & 0 & 0 & \cdots & 0 & & \\ 0 & 0 & 0 & 0 & \cdots & 0 & (Hess_{t_N} P_0) \begin{pmatrix} d_{t_N} Q_0 \\ d_{t_N} R_0 \end{pmatrix}^{-1} & \end{pmatrix}_{[3N,3N]}.$$

The product NM is of the following form:

$$\begin{pmatrix} x_1^i y_1^j & 0 & 0 \\ \begin{pmatrix} i x_1^{i-1} y_1^j \\ j x_1^i y_1^{j-1} \end{pmatrix} & \begin{pmatrix} * \cdots * \\ * \cdots * \end{pmatrix} & \begin{pmatrix} * \cdots * \\ * \cdots * \end{pmatrix} \\ \vdots & \vdots & \vdots \\ \vdots & \vdots & \vdots \\ x_N^i y_N^j & 0 & 0 \\ \begin{pmatrix} i x_N^{i-1} y_N^j \\ j x_N^i y_N^{j-1} \end{pmatrix} & \begin{pmatrix} * \cdots * \\ * \cdots * \end{pmatrix} & \begin{pmatrix} * \cdots * \\ * \cdots * \end{pmatrix} \end{pmatrix}_{[3N,|\Delta|+|\Delta'|+|\Delta''|]}.$$

It is then sufficient to show that the matrix

$$\begin{pmatrix} x_1^i y_1^j \\ \begin{pmatrix} i x_1^{i-1} y_1^j \\ j x_1^i y_1^{j-1} \end{pmatrix} \\ \vdots \\ x_N^i y_N^j \\ \begin{pmatrix} i x_N^{i-1} y_N^j \\ j x_N^i y_N^{j-1} \end{pmatrix} \end{pmatrix}_{[3N,|\Delta|]}.$$

is of rank $3N$. It is equivalent to show that the linear space of curves in $|\mathcal{L}_\Delta|$ with singularities at all the quadratic points of $(P_0 = 0)$ is of codimension $3N$. This follows from Lemma 5.6.4. □

Let $\partial\Delta_+ \subset \partial\Delta$ be a subset of the set of edges of Δ. Let $\partial\Delta'_+ \subset \partial\Delta'$ (resp., $\partial\Delta''_+ \subset \partial\Delta''$) be a subset of the set of edges of Δ' (resp., of Δ''). Put

$$m = \sum_{F \in \partial\Delta_+} \left(\#(F \cap \mathbb{Z}^2) - 1\right),$$

$$m' = \sum_{F' \in \partial\Delta'_+} \left(\#(F' \cap \mathbb{Z}^2) - 1\right),$$

$$m'' = \sum_{F'' \in \partial\Delta''_+} \left(\#(F'' \cap \mathbb{Z}^2) - 1\right).$$

Theorem 5.6.7. *Suppose that*

$$\begin{cases} 2N + m < & b(\Delta), \\ m' & < b(\Delta'), \\ m'' & < b(\Delta''). \end{cases}$$

Then, there exists a neighborhood V of (P_0, t_0, Q_0, R_0) such that the intersection

$$S'_1 \cap ... \cap S'_N \cap \big(\mathcal{P}(\Delta, \partial\Delta_+, P_0) \times \mathcal{P}(\Delta', \partial\Delta'_+, Q_0) \times \mathcal{P}(\Delta'', \partial\Delta''_+, R_0)\big) \cap V$$

is transversal in $\mathcal{P}(\Delta) \times \mathcal{P}(\Delta') \times \mathcal{P}(\Delta'')$.

Proof. The proof follows the same lines as the proof of Theorem 5.6.6. It reduces to the proof of the following facts.

- The linear space of curves in $|\mathcal{L}_\Delta|$ with singularities at all the quadratic points of $(P_0 = 0)$ and passing through the m points of intersection of $(P_0 = 0)$ with $\partial\Delta_+$ is of codimension $3N + m$.

- The linear space of curves in $|\mathcal{L}_{\Delta'}|$ passing through the m' points of intersection of $(Q_0 = 0)$ with $\partial\Delta'_+$ is of codimension m'.

- The linear space of curves in $|\mathcal{L}_{\Delta''}|$ passing through the m'' points of intersection of $(R_0 = 0)$ with $\partial\Delta''_+$ is of codimension m''.

All this follows from Lemma 5.6.4. □

Bibliography

[AM08] M. Akriche et F. Mangolte : Nombres de Betti des surfaces elliptiques réelles. *Beiträge Algebra Geom.*, 49(1):153–164, 2008.

[Arn71] V. I. Arnol′d : The situation of ovals of real plane algebraic curves, the involutions of four-dimensional smooth manifolds, and the arithmetic of integral quadratic forms. *Funkcional. Anal. i Priložen.*, 5(3):1–9, 1971.

[Bea83] A. Beauville : *Complex algebraic surfaces*, volume 68 de *London Mathematical Society Lecture Note Series*. Cambridge University Press, Cambridge, 1983. Translated from the French by R. Barlow, N. I. Shepherd-Barron and M. Reid.

[Ber02] B. Bertrand : *Hypersurfaces et intersections complètes maximales dans les variétés toriques*. Thèse de doctorat, Université de Rennes I, 2002.

[Bih01] F. Bihan : Une sextique de l'espace projectif réel avec un grand nombre d'anses. *Rev. Mat. Complut.*, 14(2):439–461, 2001.

[Bih03] F. Bihan : Asymptotic behaviour of Betti numbers of real algebraic surfaces. *Comment. Math. Helv.*, 78(2):227–244, 2003.

[BIMS] E. Brugallé, I. Itenberg, G. Mikhalkin et K. Shaw : Brief introduction to tropical geometry. *To appear in the Proceedings of 21st Gökova Geometry-Topology Conference*.

[BLdM12] E. A. Brugallé et L. M. López de Medrano : Inflection points of real and tropical plane curves. *J. Singul.*, 4:74–103, 2012.

[BR90] R. Benedetti et J. J. Risler : *Real algebraic and semi-algebraic sets*. Actualités Mathématiques. [Current Mathematical Topics]. Hermann, Paris, 1990.

[Bru06] E. Brugallé : Real plane algebraic curves with asymptotically maximal number of even ovals. *Duke Math. J.*, 131(3):575–587, 2006.

[Com28] A. Comessatti : Sulla connessione delle superficie algebriche reali. *Ann. Mat. Pura Appl.*, 5(1):299–317, 1928.

[DK00] A. Degtyarev et V. Kharlamov : Topological properties of real algebraic varieties: Rokhlin's way. *Uspekhi Mat. Nauk*, 55(4(334)):129–212, 2000.

[Ful93] W. FULTON : *Introduction to toric varieties*, volume 131 de *Annals of Mathematics Studies*. Princeton University Press, Princeton, NJ, 1993. The William H. Roever Lectures in Geometry.

[Ful98] W. FULTON : *Intersection theory*, volume 2 de *Ergebnisse der Mathematik und ihrer Grenzgebiete. 3.* Springer-Verlag, Berlin, second édition, 1998.

[GKZ08] I. M. GELFAND, M. M. KAPRANOV et A. V. ZELEVINSKY : *Discriminants, resultants and multidimensional determinants*. Modern Birkhäuser Classics. Birkhäuser Boston, Inc., Boston, MA, 2008. Reprint of the 1994 edition.

[Gud69] D. A. GUDKOV : Complete topological classification of the disposition of ovals of a sixth order curve in the projective plane. *Gor′kov. Gos. Univ. Učen. Zap. Vyp.*, 87:118–153, 1969.

[Haa95] B. HAAS : Les multilucarnes: nouveaux contre-exemples à la conjecture de Ragsdale. *C. R. Acad. Sci. Paris Sér. I Math.*, 320(12):1507–1512, 1995.

[Har76] A. HARNACK : Ueber die Vieltheiligkeit der ebenen algebraischen Curven. *Math. Ann.*, 10(2):189–198, 1876.

[Hil02] D. HILBERT : Mathematical problems. *Bull. Amer. Math. Soc.*, 8(10):437–479, 1902.

[Hir95] F. HIRZEBRUCH : *Topological methods in algebraic geometry*. Classics in Mathematics. Springer-Verlag, Berlin, 1995. Translated from the German and Appendix One by R. L. E. Schwarzenberger, With a preface to the third English edition by the author and Schwarzenberger, Appendix Two by A. Borel, Reprint of the 1978 edition.

[Hor93] E. HORIKAWA : Deformations of sextic surfaces. *Topology*, 32(4):757–772, 1993.

[IMS09] I. ITENBERG, G. MIKHALKIN et E. SHUSTIN : *Tropical algebraic geometry*, volume 35 de *Oberwolfach Seminars*. Birkhäuser Verlag, Basel, second édition, 2009.

[Ite95] I. ITENBERG : Counter-examples to Ragsdale conjecture and T-curves. *In Real algebraic geometry and topology (East Lansing, MI, 1993)*, volume 182 de *Contemp. Math.*, pages 55–72. Amer. Math. Soc., Providence, RI, 1995.

[Ite97] I. ITENBERG : Topology of real algebraic T-surfaces. *Rev. Mat. Univ. Complut. Madrid*, 10(Special Issue, suppl.):131–152, 1997. Real algebraic and analytic geometry (Segovia, 1995).

[Ite01] I. ITENBERG : On the number of even ovals of a nonsingular curve of even degree in $\mathbb{CP}^2$. *In Topology, ergodic theory, real algebraic geometry*, volume 202 de *Amer. Math. Soc. Transl. Ser. 2*, pages 121–129. Amer. Math. Soc., Providence, RI, 2001.

[Kha76] V. M. KHARLAMOV : Topological types of nonsingular surfaces of degree 4 in $\mathbf{R}P^3$. *Funkcional. Anal. i Priložen.*, 10(4):55–68, 1976.

[Kha78] V. M. KHARLAMOV : Isotopic types of nonsingular surfaces of degree 4 in $\mathbf{R}\mathrm{P}^3$. *Funkcional. Anal. i Priložen.*, 12(1):86–87, 1978.

[Kho78] A.G. KHOVANSKII : Newton polyhedra and toroidal varieties. *Funct. Anal. Appl.*, 11:289–296, 1978.

[KO06] R. KENYON et A. OKOUNKOV : Planar dimers and Harnack curves. *Duke Math. J.*, 131(3):499–524, 2006.

[Mik00] G. MIKHALKIN : Real algebraic curves, the moment map and amoebas. *Ann. of Math. (2)*, 151(1):309–326, 2000.

[Mik04] G. MIKHALKIN : Decomposition into pairs-of-pants for complex algebraic hypersurfaces. *Topology*, 43(5):1035–1065, 2004.

[Mik05] G. MIKHALKIN : Enumerative tropical algebraic geometry in $\mathbb{R}^2$. *J. Amer. Math. Soc.*, 18(2):313–377, 2005.

[Mik06] G. MIKHALKIN : Tropical geometry and its applications. *In International Congress of Mathematicians. Vol. II*, pages 827–852. Eur. Math. Soc., Zürich, 2006.

[Ore01] S. Yu. OREVKOV : Real quintic surface with 23 components. *C. R. Acad. Sci. Paris Sér. I Math.*, 333(2):115–118, 2001.

[Ore03] S. Yu. OREVKOV : Riemann existence theorem and construction of real algebraic curves. *Ann. Fac. Sci. Toulouse Math. (6)*, 12(4):517–531, 2003.

[Pet38] I. PETROWSKY : On the topology of real plane algebraic curves. *Ann. of Math. (2)*, 39(1):189–209, 1938.

[Rag06] V. RAGSDALE : On the Arrangement of the Real Branches of Plane Algebraic Curves. *Amer. J. Math.*, 28(4):377–404, 1906.

[RGST05] J. RICHTER-GEBERT, B. STURMFELS et T. THEOBALD : First steps in tropical geometry. *In Idempotent mathematics and mathematical physics*, volume 377 de *Contemp. Math.*, pages 289–317. Amer. Math. Soc., Providence, RI, 2005.

[Ris93] J. J. RISLER : Construction d'hypersurfaces réelles (d'après Viro). *Astérisque*, (216):Exp. No. 763, 3, 69–86, 1993. Séminaire Bourbaki, Vol. 1992/93.

[Rok72a] V. A. ROKHLIN : Congruences modulo 16 in Hilbert's sixteenth problem. *Funkcional. Anal. i Priložen.*, 6(4):58–64, 1972.

[Rok72b] V. A. ROKHLIN : Proof of a conjecture of Gudkov. *Funkcional. Anal. i Priložen.*, 6(2):62–64, 1972.

[Rok73] V. A. ROKHLIN : Congruences modulo 16 in Hilbert's sixteenth problem. II. *Funkcional. Anal. i Priložen.*, 7(2):91–92, 1973.

[Rok74] V. A. ROKHLIN : Complex orientation of real algebraic curves. *Funkcional. Anal. i Priložen.*, 8(4):71–75, 1974.

[Rul01] H. RULLGARD : Polynomial amoebas and convexity. *Preprint*, 2001.

[Sha11] K. SHAW : *Tropical Intersection Theory and Surfaces.* Thèse de doctorat, Université de Genève, 2011.

[Shu98] E. SHUSTIN : Gluing of singular and critical points. *Topology*, 37(1):195–217, 1998.

[Stu94] B. STURMFELS : Viro's theorem for complete intersections. *Ann. Scuola Norm. Sup. Pisa Cl. Sci. (4)*, 21(3):377–386, 1994.

[Vir80] O. VIRO : Curves of degree 7, curves of degree 8 and the Ragsdale conjecture. *Dokl. Akad. Nauk SSSR*, 254(6):1306–1310, 1980.

[Vir84] O. VIRO : Gluing of plane real algebraic curves and constructions of curves of degrees 6 and 7. *In Topology (Leningrad, 1982)*, volume 1060 de *Lecture Notes in Math.*, pages 187–200. Springer, Berlin, 1984.

[Vir01] O. VIRO : Dequantization of real algebraic geometry on logarithmic paper. *In European Congress of Mathematics, Vol. I (Barcelona, 2000)*, volume 201 de *Progr. Math.*, pages 135–146. Birkhäuser, Basel, 2001.

[Wil78] G. WILSON : Hilbert's sixteenth problem. *Topology*, 17(1):53–73, 1978.